Internal Use Only

MOBILE PHONE
SERVICE MANUAL

CAUTION
BEFORE SERVICING THE UNIT, READ THE “SAFETY PRECAUTIONS” IN THIS MANUAL

MODEL : LG-M250

Any reproduction, duplication, distribution (including by way of email, facsimile or other electronic means), publication, modification, copying or transmission of this Service Manual is STRICTLY PROHIBITED unless you have obtained the prior written consent of the LG Electronics entity from which you received this Service Manual. The material covered by this prohibition includes, without limitation, any text, graphics or logos in this Service Manual

Copyright © 2017 LG Electronics. Inc. All right reserved. Only training and service purposes

Date: Jan 2017 / Issue 1.0

Table Of Contents

1. INTRODUCTION..... 3
1.1 Purpose
1.2 Regulatory Information

2. PERFORMANCE..... 4
2.1 Band Specification
2.2 HW Features
2.3 RSSI Display
2.4 Current consumption
2.5 Battery bar
2.6 SW Specification

3. TROUBLE SHOOTING.....17
3.1 Checking XO Block
3.2 Checking Transceiver DC Power Supply Circuit Block
3.3 Checking DC-DC Block
3.4 ASM(Antenna Switch Module) Block
3.5 GSM RF PART
3.6 WCDMA RF PART
3.7 LTE RF PART
3.8 Power
3.9 Charger
3.10 Audio Block
3.11 Checking LCD Block
3.12 Checking Touch Block
3.13 Checking accelmeter+compass sensor Block
3.14 Checking Main Camera Block
3.15 FM_Radio
3.16 Connectivity RF PART

4. BLOCK DIAGRAM..... 86

5. CIRCUIT DIAGRAM..... 94

6. BGA PIN MAP..... 111

7. PCB LAYOUT..... 112

8. HIDDEN MENU..... 118

9. DOWNLOAD..... 121

10. CALIBRATION.....122

11. DISASSEMBLE GUIDE..... 123

12. EXPLODED VIEW..... 124

13. REPLACEMENT PART LIST..... 125

Copyright © 2017 LG Electronics. Inc. All right reserved. Only training and service purposes

1.1 Purpose

This manual provides the information necessary to repair, calibration, description and download the features of this model.

1.2 Regulatory Information

A. Security

This material is prohibited to share and release to unauthorized person, in accordance with the regulations, LG Electronics, Civil / criminal responsibility in accordance with the relevant provisions violate.

B. Precautions for repair

- In case of Disassembly or Assembly to repair product, be careful of a product failure caused by RF signals and Static electricity.
- When using Magnetic tool for the Phone's SVC repair, you should check affect the Electric parts according to effect of Magnet.
- When fastening the screw, be careful not to damage the head of screw and even product.

C. Attention

Boards, which contain Electrostatic Sensitive Device (ESD), are indicated by the sign.

Following information is ESD handling:

- Service personal should ground themselves by using a wrist, strap when exchange system board.
- When repair are made to a system board, they should spread the floor with anti-static mat which is also grounded.
- Use a suitable, grounded soldering iron.
- Keep sensitive parts in these protective packages until these are used.
- When returning system board or parts like EEPROM to the Factory, use the protective package as described.

Copyright © 2017 LG Electronics. Inc. All right reserved. Only training and service purposes

2.1 Band Specification

Support Band	TX Freq (MHz)	RX Freq (MHz)
WCDMA(FDD1)	1920 – 1980	2110 – 2170
WCDMA(FDD2)	1850 – 1910	1930 – 1990
WCDMA(FDD5)	824 – 849	869 – 894
WCDMA(FDD8)	880 – 915	925 – 960
LTE(FDD1)	1920 - 1980	2110 – 2170
LTE(FDD3)	1710 – 1785	1805 – 1880
LTE(FDD7)	2500 – 2570	2620 – 2690
LTE(FDD8)	880 - 915	925 – 960
LTE(FDD20)	832 - 862	791 - 821
EGSM	880 - 915	925 – 960
GSM850	824 - 849	869 – 894
DCS1800	1710 - 1785	1805 – 1880
PCS	1850 - 1910	1930 - 1990

Copyright © 2017 LG Electronics. Inc. All right reserved. Only training and service purposes

2.2 HW Features

List	Type / Spec.	
1. Phone Type	DOP Type	
2. Size	148.7mm x 75.3mm x 7.9mm	
3. Weight	142 g (with Battery)	
4. Battery	**2,800mAh(Typ) (Li-Ion)**, 2,700mAh(Min.)	
5.Chipset	MT6750 1.5GHz Octa core	
6. Memory	16GB(EMMC) + 2GB(LPDDR3) External Memory(SD Card) : Up to 2TB	
7. LCD	Size	5.3 inch
	Display Type	Active matrix TFT, Transmissive Type
	Color	16.7M colors
	Resolution	1280(H) X 720(V), 277ppi
8. Touch	Type	5.3 inch Capacitive type
9. Main Camera (13M)	Type	CMOS image sensor
	Resolution	4224(H) X 3136(V) pixels.
	Image Scaling Down	13M(4160x3120), 9.7M(4160x2340), 4.9M(2560x1920), 3.7M(2560x1440), 2.1M(1440x1440)
	Format	**Image :** JPG, **Video :** MP4

Copyright © 2017 LG Electronics. Inc. All right reserved. Only training and service purposes

2.2 HW Features

10. Audio	Receiver	12 X 06 X 2T Receiver
	Speaker	16 X 12 X 2.6T Speaker
	Format	MP3, AAC, MIDI, EAAC+, OGG, AMR
11. Bluetooth	Standard	Bluetooth 4.2
	Effective Distance	10M
	Distance	0 m ~ 10 m (depend on environment)
12. WLAN	Standard	IEEE 802.11 b/g/n
	Throughput	Max 40Mbps (SDIO Driver performance)
	Depend on environment	0 ~ 50m (depend on environment)
13. GPS	type	A-GPS
14. FM	type	FM Radio, 3.5pi Ear-jack

Copyright © 2017 LG Electronics. Inc. All right reserved. Only training and service purposes

2.3 RSSI Display

RSSI BAR	GSM	WCDMA	LTE	Comment
BAR 5->4	-91dBm ± 3	-85dBm ± 4	-85dBm ± 4	1. Call Connected & CPIPH Level=-3.3 2. LTE: RSRP
BAR 4->3	-95dBm ± 3	-90dBm ± 4	-95dBm ± 4	
BAR 3->2	-98dBm ± 3	-96dBm ± 4	-105dBm ± 4	
BAR 2->1	-102dBm ± 3	-100dBm ± 4	-115dBm ± 4	
BAR 1->0	-104dBm ± 3	-105dBm ± 4	-128dBm ± 4	

2.4 Current consumption

	Stand by		Voice Call (LTE Data connection)	Measurement Condition
	Bluetooth Off	Bluetooth Connected		
WCDMA Only	10 mA under (DRX=7)	11 mA under (DRX=7)	250 mA under (Tx=10dBm)	LCD off
GSM Only	10 mA under (PP=5)	MultiPoint지원 : Stanby 대비△3.0mA↓ (PP=5)	400 mA under (Lvl=5)	LCD off
LTE	10 mA under (LTE 2.56S)	11 mA under (LTE 2.56s)	450 mA (@TX 10 dBm)	LCD off

Copyright © 2017 LG Electronics. Inc. All right reserved. Only training and service purposes

2.5 Battery bar

Battery Bar icon	Specification(%)
Level 20	98 ~ 100
Level 19	93 ~ 97
Level 18	88 ~ 92
Level 17	83 ~ 87
Level 16	78 ~ 82
Level 15	73 ~ 77
Level 14	68 ~ 72
Level 13	63 ~ 67
Level 12	58 ~ 62
Level 11	53 ~ 57
Level 10	48 ~ 52
Level 9	43 ~ 47
Level 8	38 ~ 42
Level 7	33 ~ 37
Level 6	28 ~ 32
Level 5	23 ~ 27
Level 4	16 ~ 22
Level 3	13 ~ 15
Level 2	8 ~ 12
Level 1	3 ~ 7
Level 0	0 ~ 2
Low Battery Pop-up	16% →15% : One Time popup (No call) There is no pop-up until 5% if you delete pop-up.
Critical Low battery pop-up	6% → 5% : One Time popup (No call) There is no pop-up until 3% if you delete pop-up.
Power off	2%-->1%

Copyright © 2017 LG Electronics. Inc. All right reserved. Only training and service purposes

2.6 SW Specification

Function	Detail Item	O / X	Specification	Etc.
OS	OS	O	Android N-OS	
Data	Circuit	X		
	Packet	O		
Connectivity	Infrared (IrDA)	X		
	Bluetooth	O	Ver. 4.2	
	Wi-Fi	O	802.11 b/g/n	
	USB	O	Ver. 2.0	
	USB Mass storage	X	MTP support	
	RS232	X		
	DLNA1.5	X		
Voice Function	Voice Recording	O		
	Voice Command	X	Digit Dial	
		X	Name Dial	
		X	Menu	
		X	Phonebook Searching	
	Answering machine	X	Driving, Meeting, user define(absent)	
Memory	User Memory	O	Total	16GB eMMC/ 2GB DDR + external MicroSD
		O	Total User Memory	8.4GB (TBD) (w/o MicroSD)
		O	MMS	
		O	Pictures (Still Image & Moving Image)	
		O	MP3 (Music Contents)	
		X	Java Contents	
		O	Wallpaper	
		O	Ringtone	
		O	external memory (microSD)	up to 32GB
Camera (Still Capture)	Memory	O	MicroSD	
	Camera Module	O	13M AF	
	Auto Focus	O	Still Mode AF	
	Digital Zoom	O	4x	
	Capture Resolution	O	Rear 4160x3120, 4160x2340, 3120x3120 Front 2560x1920, 2560x1440, 1920x1920	
	Continuous Shot	O		
	Quality	X		
	Preview Image	O	960x720(Normal), 1280x720(Wide))	
	TV-Out	X		
	Flash	O	LED	

Copyright ⓒ 2017 LG Electronics. Inc. All right reserved. Only training and service purposes

2.6 SW Specification

Camera (Movie Capture)	Movie Resolution	O	Rear 1920x1080, 1280x720 Front 1920x1080, 1280x720	
	Filter	X		
	Quality	X		
	MPEG Visual Bit Rate	X		Default code H.264 And video Bit rate is 17Mbps We can support MPEG-4, but t he bit rate is depend on Applic ation setting
	Audio Encode	O	AAC, , AMR-NB	
	Audio Decode	O	AMR	
	Movie Recode	O	Recode, Stop, Pause, Resume	
	Movie Playback	O	Play, Stop, Pause	
	Stream Format (Mux)	O	mp4, 3gp	mp4 – normal 3gp – mms
	Stream Format (Demux)	O	mp4, 3gp	mp4 – normal 3gp – mms
	Recoding Time	O	Real Time Recoding	
	TV-Out	X		
Audio Multimedia	Voice Codec	O	AMR/ 3gpp	
	AAC /AAC+/ EAAC+	O		
	MP3, WAV	O		
	WMA	O		
	Midi	O	● Type 0 and 1 (.mid, .xmf, .mxmf) ● RTTTL/RTX (.rtttl, .rtx) ● OTA (.ota) ● iMelody (.imy)	
	Music ringtone	O	MP3, AAC, AAC+, eAAC+, AMR, OGG, FLAC , ALAC, PCM, WMA, OPUS	
	AMR-NB	O		
	Music player skin	O	Music Player	
	FM Radio	O		
	Speakerphone	O		

Copyright © 2017 LG Electronics. Inc. All right reserved. Only training and service purposes

2.6 SW Specification

Multimedia	MPEG4/H.263	O	MPEG4 - Decoding : 1080p/30fps/20Mbps H.263 - Decoding : 704*576/30fps/15Mbps	
	H.264	O	Decoding : 1080p/30fps/20Mbps	
	WMV	X		
	Normal View	O	Moving Image Capture & Movie Contents	contents size
	Wide View	O	Full Screen mode	
	Custom DTV Zoom	X		
Other Features	File Viewer	X		Android App can be downloaded in Play Store
	Macromedia Flash Lite	X	Not Available	
	e-Book/e-Comic Book	X	*.doc, *.jpg, *.gif	E-book reader program is not included in ROM. But user can download in internet..
	Flight Mode	O		
Internet Browser	WAP (Windows Mobile 6.0 IE Mobile)	X	version 2.0	
		X	WML1.3	
		O	XHTML1.1	
		O	HTML4.01	Partially support - HTML 5
Java	MIDP	X		
	J2ME support	X		
	Game & Contents	X		
	CLDC	X		
Flash	Flash Game	X		
Streaming Service	H.263+AAC/AMR-NB	O	H.263 - Decoding : 704*576/30fps/15Mbps	
	MPEG4+AAC/AMR-NB	O	MPEG4 - Decoding : 1080p/30fps/20Mbps	
	WMV9	X		
DRM	OMA DRM	O	Forward Lock	
		X	Separate Delivery	
		X	Combined Delivery - Count-only	
OTA	OTA	O	OTA 1.0	
Display	RSSI	O	6 level (Include No service)	
	Battery Level	O	with percentage	Yes
	RTC	O		
	Multi Language	O	depending on build language.	
	Quick Access Mode	X		
	PLMN/Service Indicator	O		
	Dimming Clock	X	Battery power 15s, 30s, 1min, 2min, 5min 10min, 15min External power 15s, 30s, 1min, 2min, 10min, 15min	Screen timeout supports

Copyright © 2017 LG Electronics. Inc. All right reserved. Only training and service purposes

2.6 SW Specification

Normal Features	Last Dialed Number	O		
	Last Received Number	O		
	Last Missed Number	O		
	Scratch Pad Memory	X		
Call Management Managemen	Call Waiting	O		
	Call Swap	O		
	Call Retrieve	O		
	Auto Answer	O		
	Automatic Redial	X		
	Calling Line Identification	O		
	Full Call divert	O		
	Speed Dialing	O		
	Last Number Redial	X		
	Multiparty Call (Conferenc e Call)	O		
	Explicit Call Transfer	O		
Network	Automatic Network Selecti on	O		
	Manual Network Selection	O		
	Network Service Status	O		
DTMF	DTMF Signaling	O		
	DTMF Enable & Disable	X		
Audio	Key Tone Volume	O	16 Level (Include Mute)	
	Ring Tone Volume	O	16 Level (Include Mute)	
	Ring Tone Pattern	O	ogg	
	Ring Type Silent	O	Vibrator & Ring (Indicator)	
	Earpiece Volume	O	16 Level (Include Mute)	
	Mute	O		
Cell Broadcast	Read Cell Broadcast	O		
	Cell Broadcast Categories	X		
	Cell Broadcast Message La nguage	O	Supports filtering with language IDs (Germa n,Italian,French, Spanish, Dutch,Swedish,Danish, Portuguese,Finnish,Norweggian, Greek,Turkish,Hungarian,Polish, Czech)	

Copyright © 2017 LG Electronics. Inc. All right reserved. Only training and service purposes

2.6 SW Specification

Phone Book	Entry	O	Name, Phone, Email, Groups, Postal address, Ringtone, Notification Sound, Phonetic name, Organization, IM, Notes, Nickname, Website, Event	
	Field	O	Phone(Mobile,Work,Home,Main, Work Fax ,Home Fax,Pager, Other, Custom) Email(Home,Work,Other,Custom) Groups(Coworkers,Family,Friends) Postal address(Home,Work,Other,Custom) Organization(Company,Title) IM(AIM,Windows Live,Yahoo,Skype,QQ,Hangouts,ICQ,Jabber,Custom) Event(Birthday,Anniversary,Other, Custom)	
	Numeric Store and Recall	O		
	Alphabetic Store	O		
	Alphabetic Recall	X		
	Scroll by alphabetic or numeric order	O		
	Last Number Dialed	O		
	Last Number Missed	O		
	Last Number Received	O		
	Copy & Move	X	Move not support	
	Fixed Dial Number	O		
	Barred Dial Number	X		
	Service Dial Number	X	It depends on SIM card	
	Email Entry	O		
	Picture ID	O	Relating Photo caller ID	
	My Name card	O	Bluetooth transmission (OPP	
Call Cost	Last Call Timer	X		
	Last Call Charge Units	X		
	Total Call Timer	X		
	Total Charge Units	X		
	Visible, Audible Call Time /Cost Indication	X		
Supp. Services	Call Forwarding	O	All Incoming Calls,	
		O	No Reply	

Copyright © 2017 LG Electronics. Inc. All right reserved. Only training and service purposes

2.6 SW Specification

SIM	Plug In Type	O		
	SIM Lock	O		
	SIM Toolkit	O		
	Prepaid SIM Operation	O		
Short Messaging	Read Message	O	EMS Not Support	
	Write and Edit Message	O		
	Send and Receive Message	O		
	Reply to Message	O		
	Forward Message	O		
	Extract Number from Message	O		
	Message Status	O		
	Message Unread Indicator	O		
	Settable Message Center Number,	O		
	Reply Path and Validity	X		
	Visible and Audible Message Receive Alerting	O		
	Voice Mail	O		
	Settable Voice Mail Center Number	X		
	Message Protocol	X		
	Message Overflow Indicator	O		
	Message Center Number	O		
	Help Menu	X		
Multimedia Messaging	Picture Attachable	O		Max bytes is it, According to inserted usim
	Moving Picture Attachable	O	Video MMS	Max bytes is it, According to inserted usim
	Voice Attachable	O	AMR	
	Help Menu	X		

Copyright © 2017 LG Electronics. Inc. All right reserved. Only training and service purposes

2.6 SW Specification

Instant Messaging Service	IM	X		Android App can be downloaded in Play Store
	PC Compatable	X		
	Menu Option	X		
E-Mail	Protocol	O	IMAP4	
		O	SMTP	
		O	POP3	
		X	Help Menu	
Voice Instant Messaging Service	PTT	X	Full Duplex	
		X	Half Duplex	
	Menu Option	X	Grouping	
		X	Status List	
		X	Help	
		X	Others	
Sound Contents	Wallpaper	X		
	Screen Saver	X		
	Ringtones	O		
	Karaoke	X		
	Stutter Sound	O		
	Flip tone	X		
	Button tone	O	can be enable or disable button press sound.	
	Others	X		
Calendar	New Event	O		
	Edit Event	O		
	Agenda	O		
	Reminder	O		
	Google sync	O		
Miscellaneous Function	Development & Test Facility	O		
	Field Test Facility	X		
	Display Software Version	O		
	IMEI	O	*#06#	
Text Input	Language	O		
	Predictive word input	O	T9 predictive supported.	
Scheduler	Schedule	O		
	To Do List	O		
	Memo	O		
	D-day counter	X		
	Send via Bluetooth	O		
World Time	Setting Local Time	O		
	Display Two Number of Cities Time	X		

Copyright © 2017 LG Electronics. Inc. All right reserved. Only training and service purposes

2.6 SW Specification

Unit converter		X		
Stop watch		O		
Calculator	Calculation	O		
PC Sync	Phone Book Sync	X	PC Bridge supports backup and restore (not sync)	
	Message Sync	x	PC Bridge supports backup and restore (not sync)	
	Multimedia Contents Sync	x	PC Bridge supports backup and restore (not sync)	
	Scheduler Sync	X	PC Bridge supports backup and restore (not sync)	
Sync ML	DS	X		
	DM	X		
Game		X	TBD	
Menu	Quick Access Mode (Profile)	O		
External Interface	Electrical Man Machine Interface	X		
	Development and Test Facility	X		
Handset	Restore Factory Setting	O		
	Read Software Version	O		
	Battery Charging Mode	O	USB/ TA Charging	USB/ TA Charging
Security	Emergency Call	O		
	Handset Lock	O		
	Security Code	O		
	SIM Lock	O		
	Key guard	X		
Real Time Clock	12/24 hour	O		
	Calendar	O		
	Time Zone	O		
	Alarm Manager	O		
	Dimming Clock	X	Battery power 15s, 30s, 1min, 2min, 10min, 15min External power 15s, 30s, 1min, 2min, 10min, 15min	Screen timeout supports
	Power-off Alarm	X		
	On Alarm Event	O	Display	

Copyright © 2017 LG Electronics. Inc. All right reserved. Only training and service purposes

3.1 Checking XO Block

The out put frequency(26MHz) of VTCXO(X14000) is used as the reference one of MT6169

Checking Flow

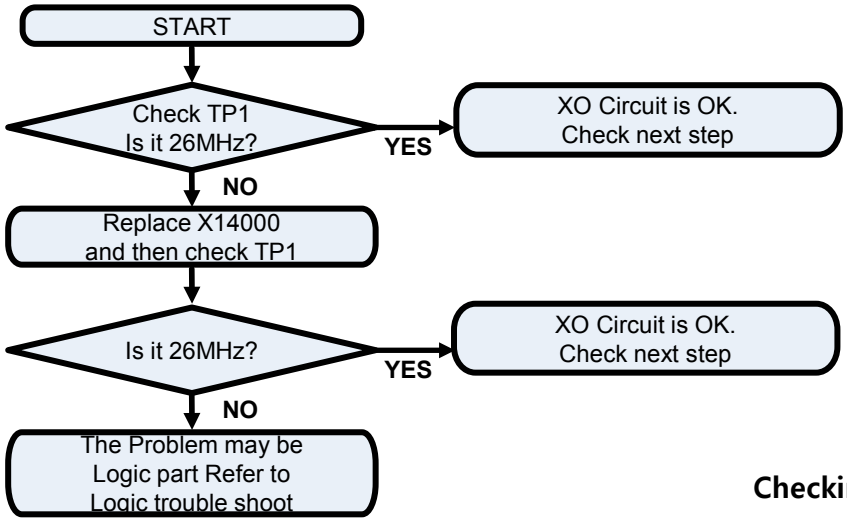

Image

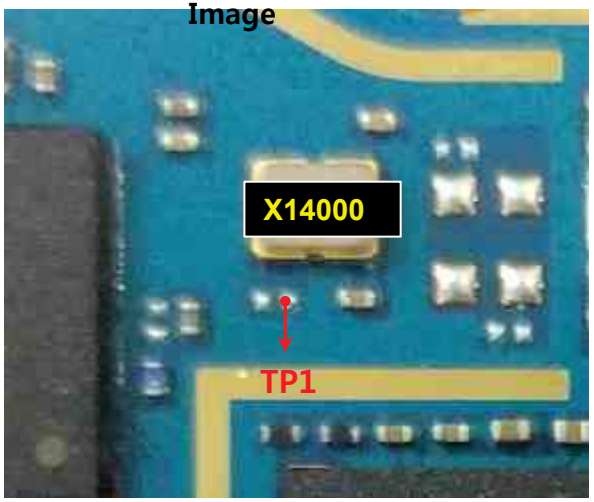

Checking Flow

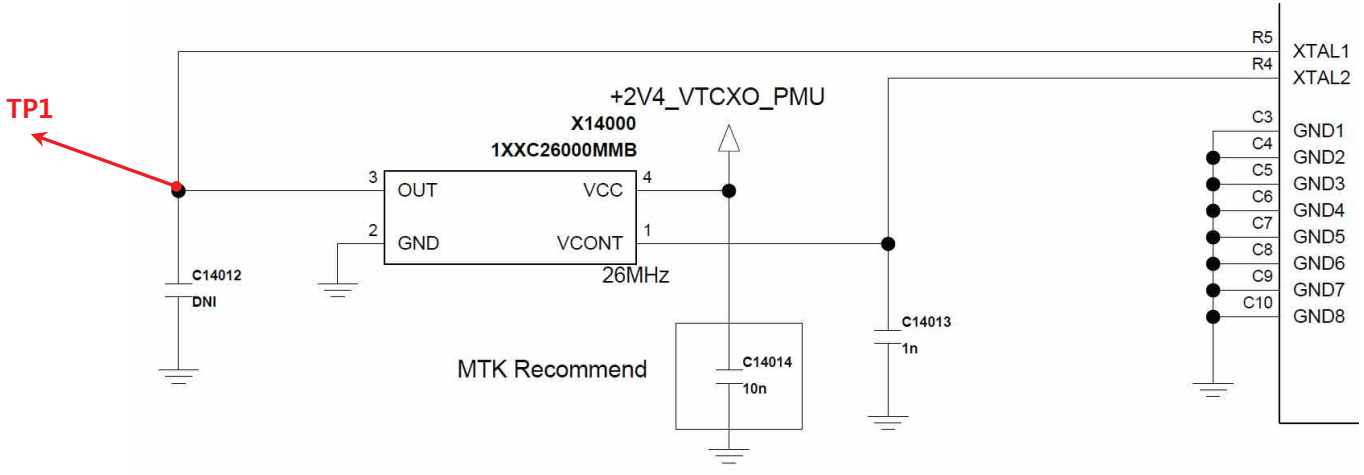

Copyright © 2017 LG Electronics. Inc. All right reserved. Only training and service purposes

3.2 Checking Transceiver DC Power Supply Circuit Block

The MT6169 operating voltages used two voltage sources 1.8V and 2.4V

Checking Flow

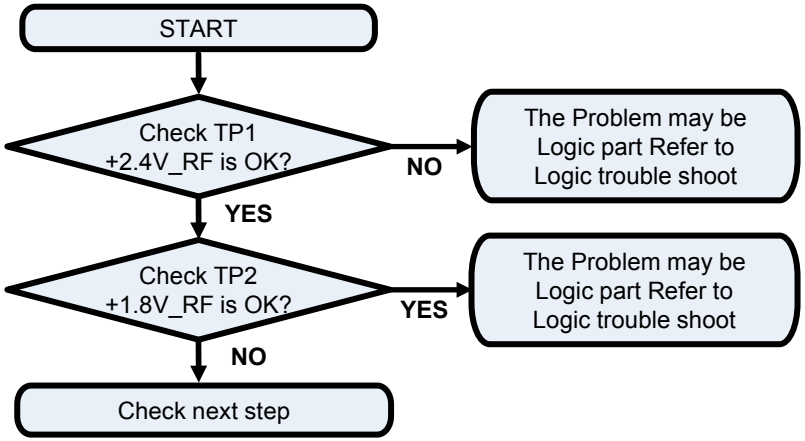

Image

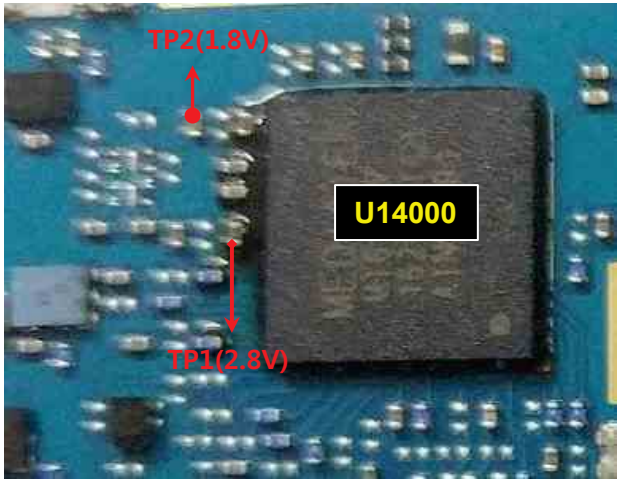

Circuit Diagram

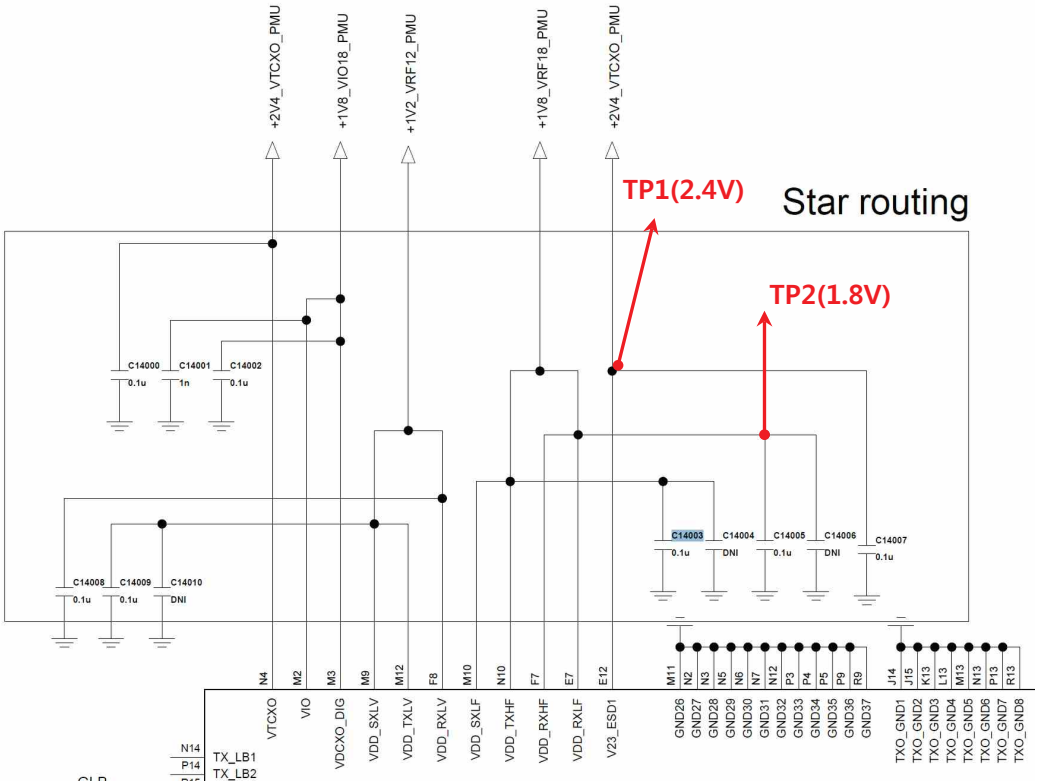

Copyright © 2017 LG Electronics. Inc. All right reserved. Only training and service purposes

3.3 Checking DC-DC Block

The DC-DC(MT6328, U4100) output voltages is used as the reference one of SKY77643-31

Checking Flow

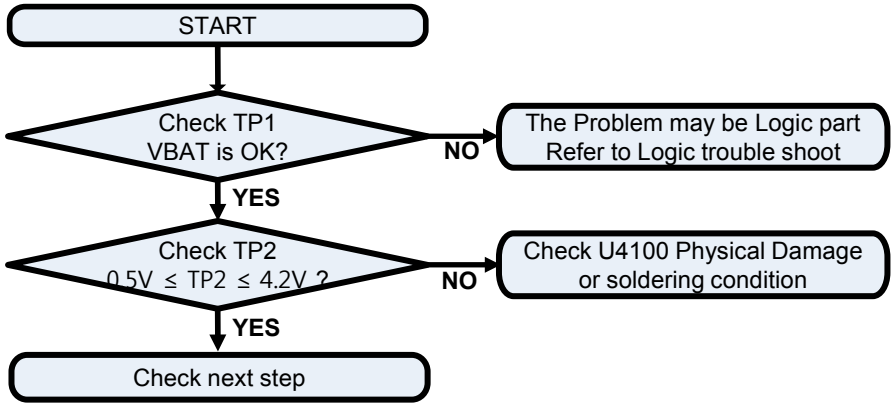

Image

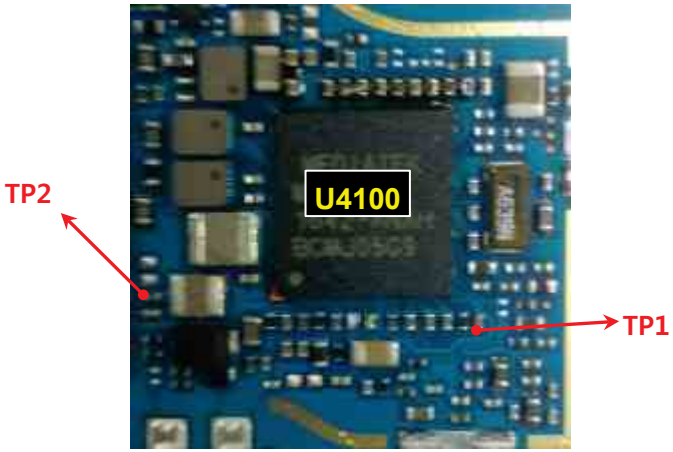

Circuit Diagram

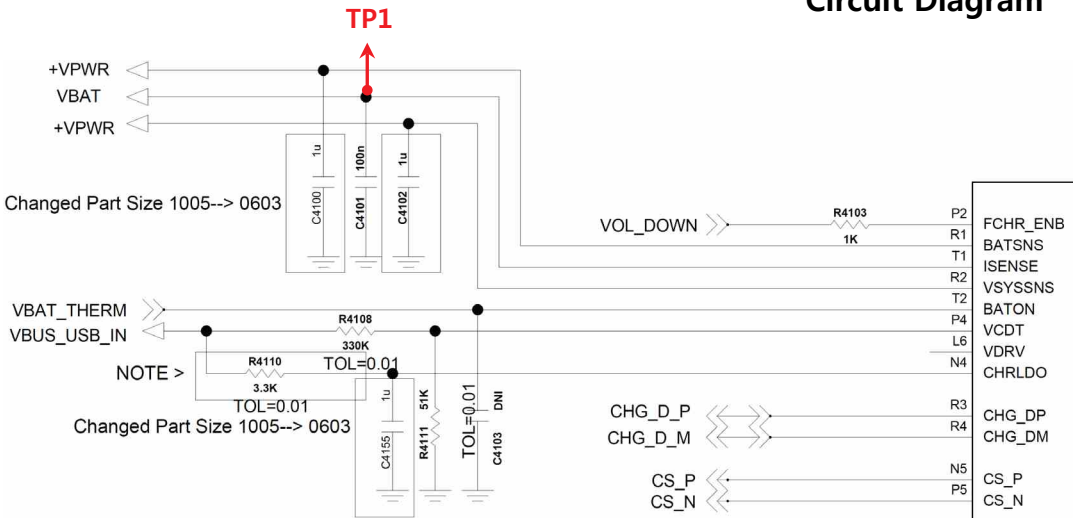

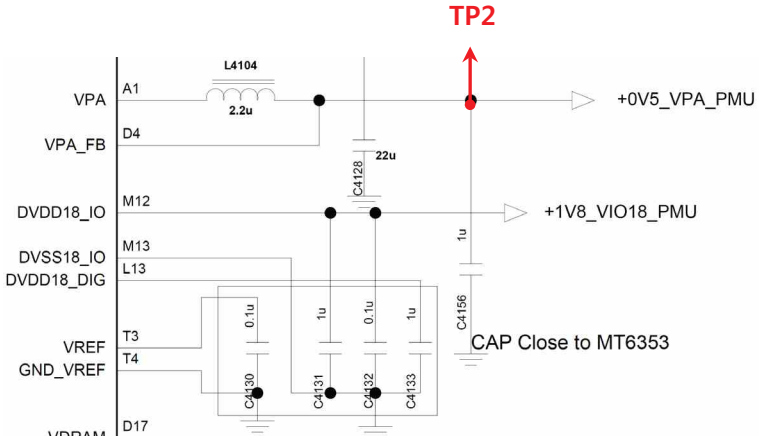

Copyright © 2017 LG Electronics. Inc. All right reserved. Only training and service purposes

3.4 ASM(Antenna Switch Module) Block

3.4.1 Checking ANT #1 ASM (GSM 850/900, W B5/8, LTE B7/28)

Checking Flow

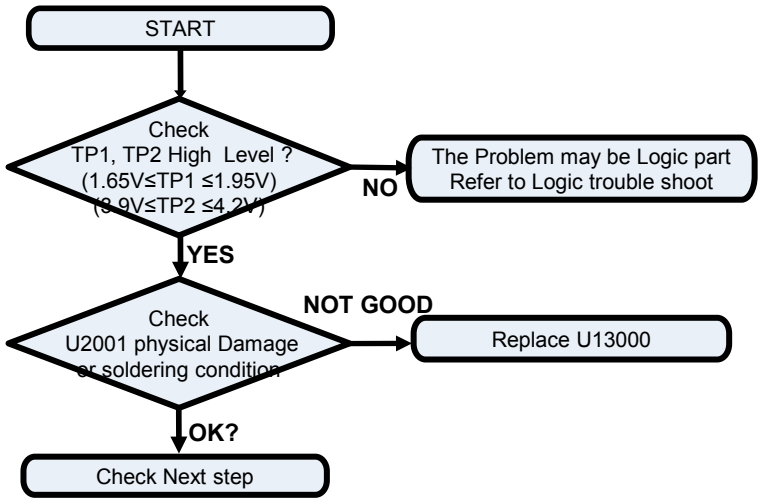

Image

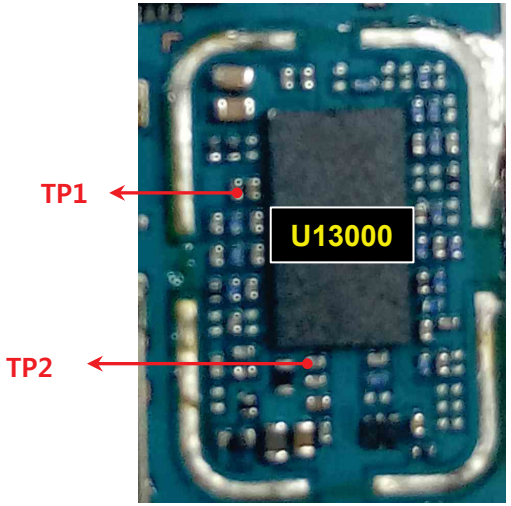

Circuit Diagram

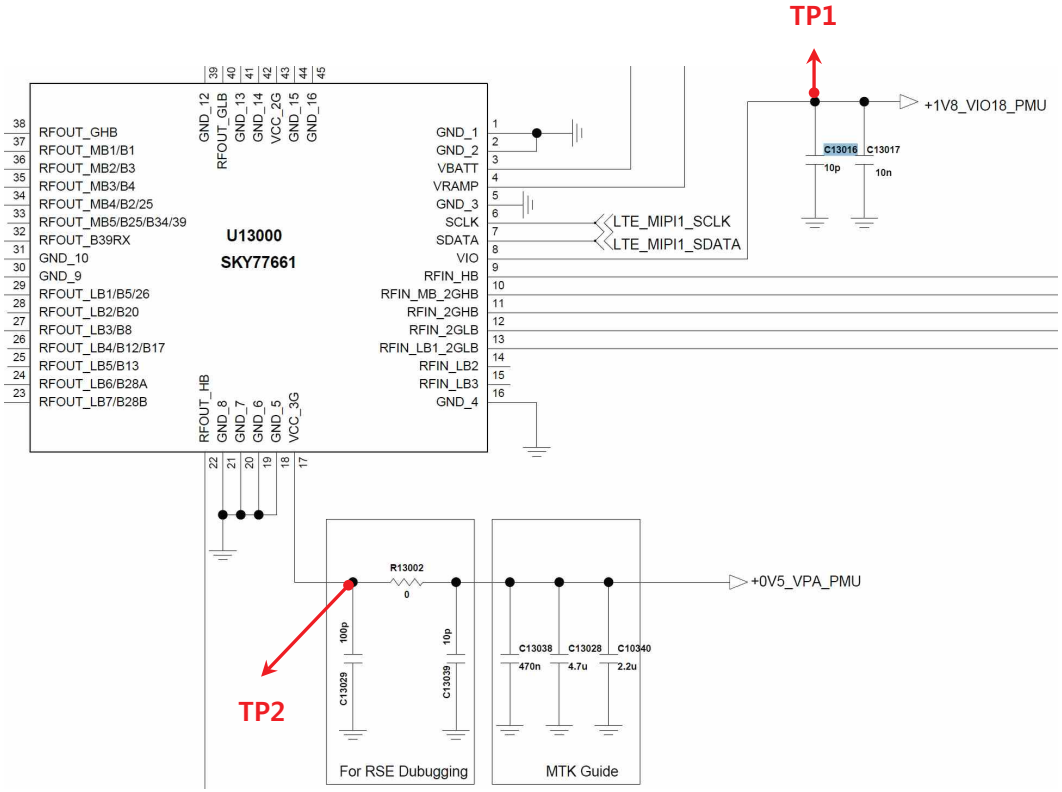

Copyright © 2017 LG Electronics. Inc. All right reserved. Only training and service purposes

3.5 GSM RF PART

GSM RF Part support GSM850/900/1800/1900 with ASM, PAM, Transceiver component

Checking Flow

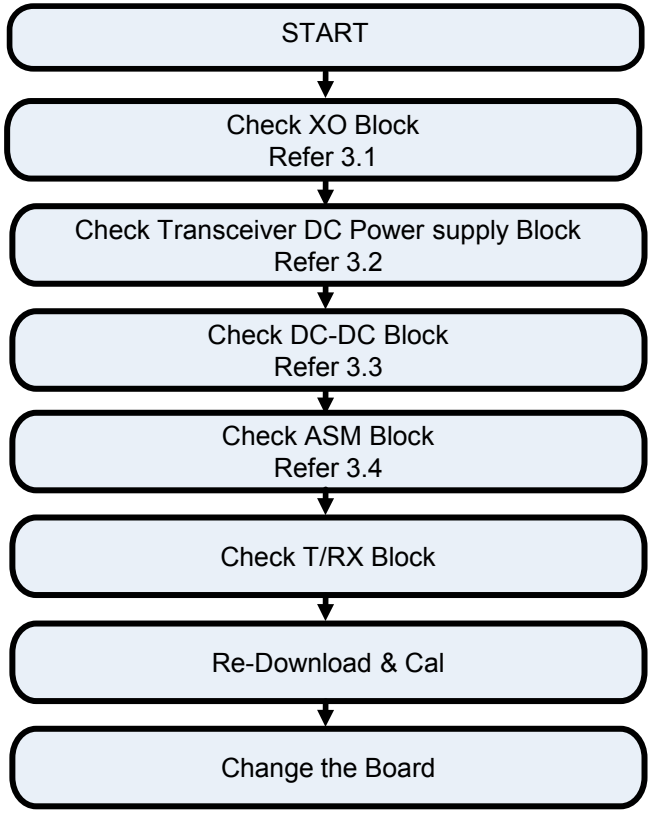

Copyright © 2017 LG Electronics. Inc. All right reserved. Only training and service purposes

3.5 GSM RF PART

3.5.2 Checking RF Signal RX path(SW, GSM850/900)

Checking Flow

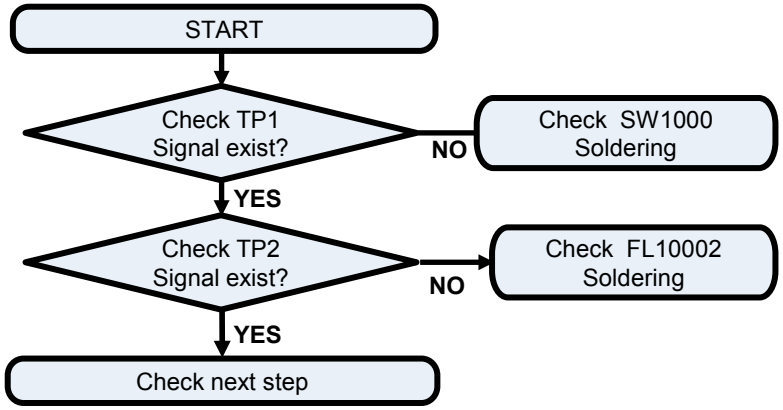

Image

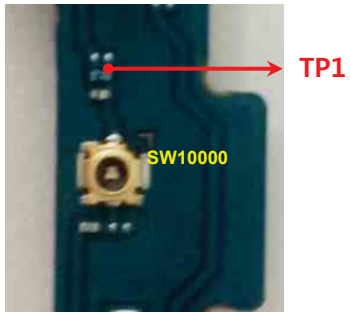

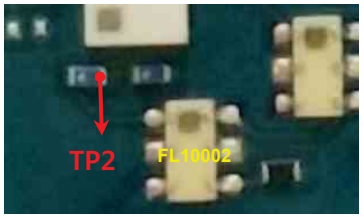

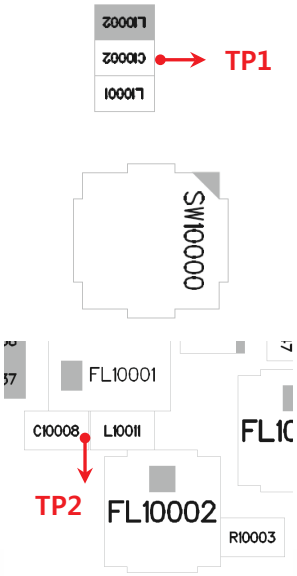

Circuit Diagram

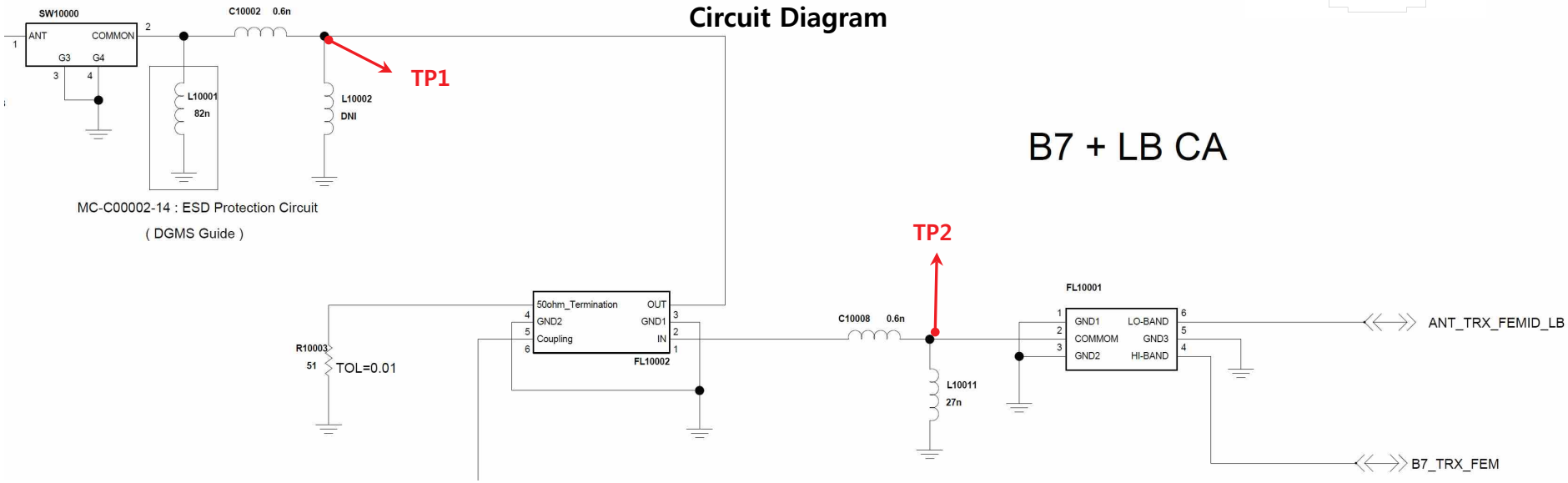

Copyright © 2017 LG Electronics. Inc. All right reserved. Only training and service purposes

3.5 GSM RF PART

3.5.3 Checking RF Signal RX path(GSM850/900)

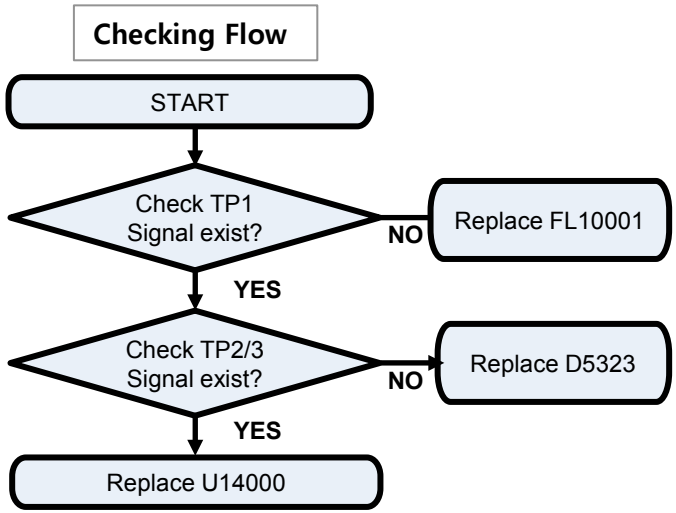

Image

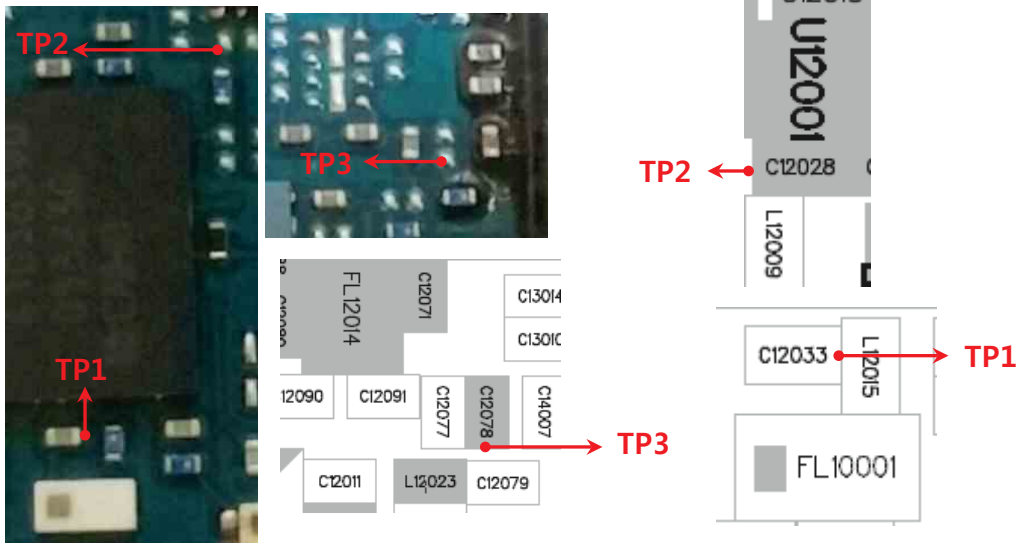

Circuit Diagram

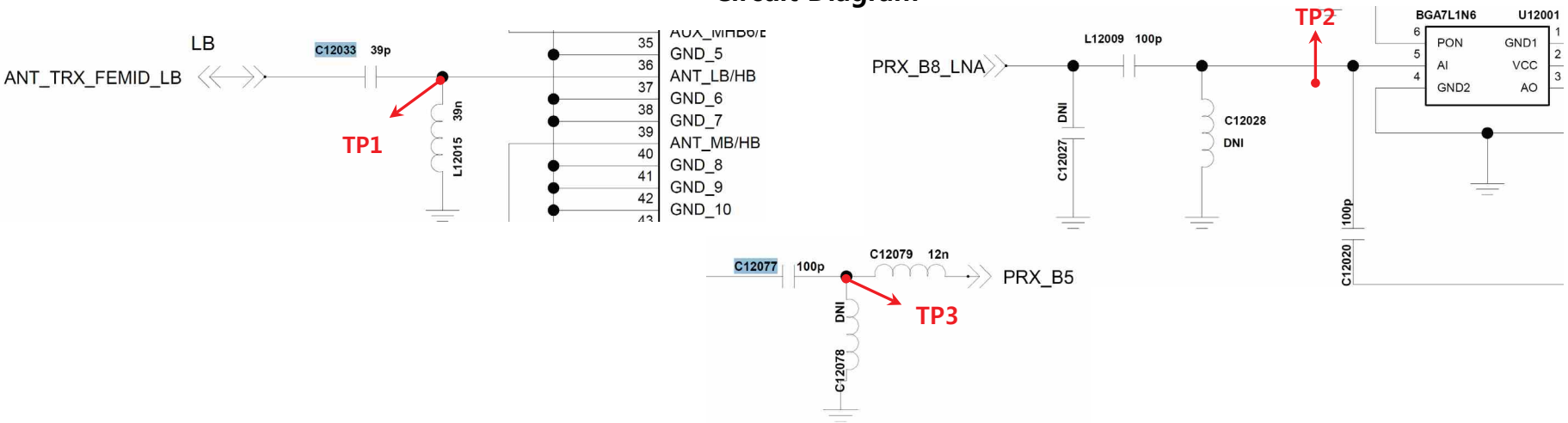

Copyright © 2017 LG Electronics. Inc. All right reserved. Only training and service purposes

3.5 GSM RF PART
3.5.4 Checking RF Signal RX path(GSM1800/1900)

Checking Flow

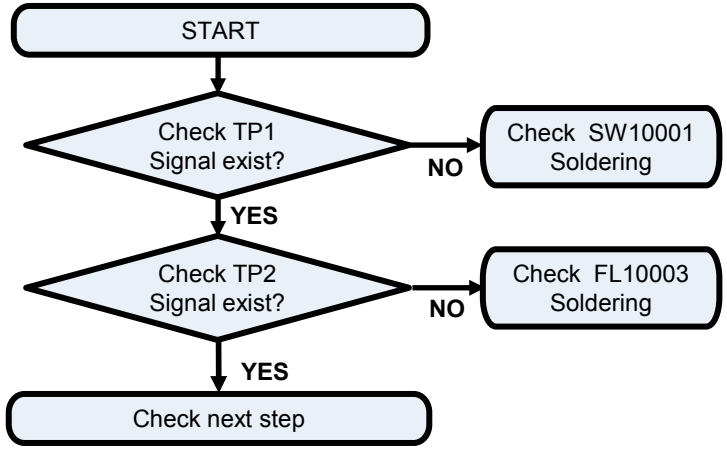

Image

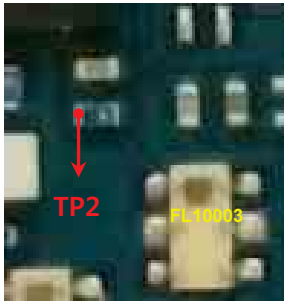

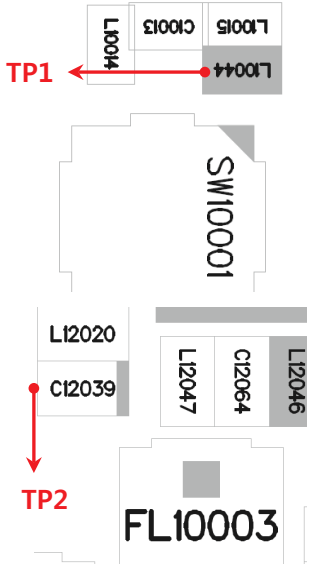

Circuit Diagram

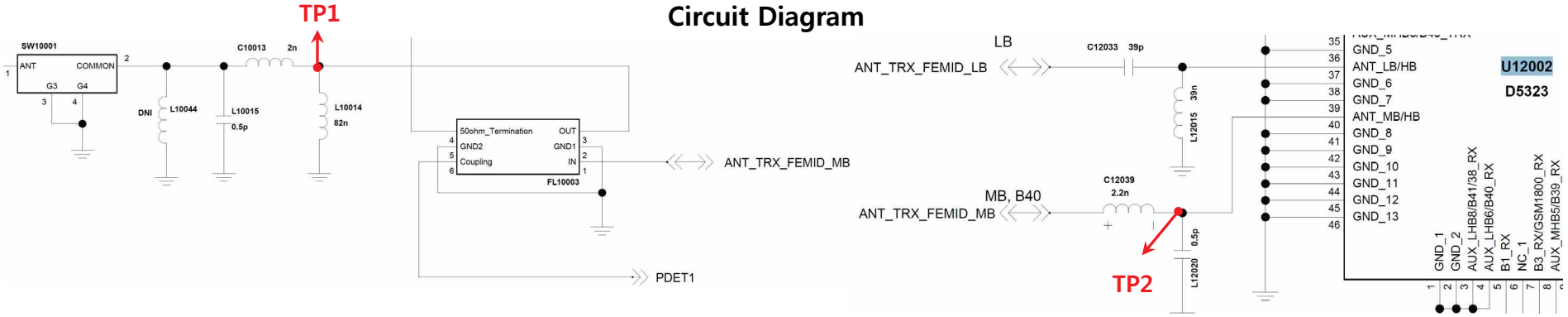

Copyright © 2017 LG Electronics. Inc. All right reserved. Only training and service purposes

3.5 GSM RF PART
3.5.5 Checking RF Signal RX path(GSM1800/1900)

Checking Flow

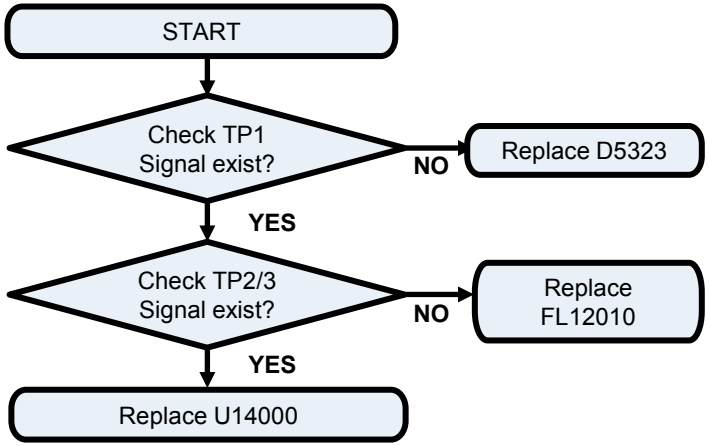

Image

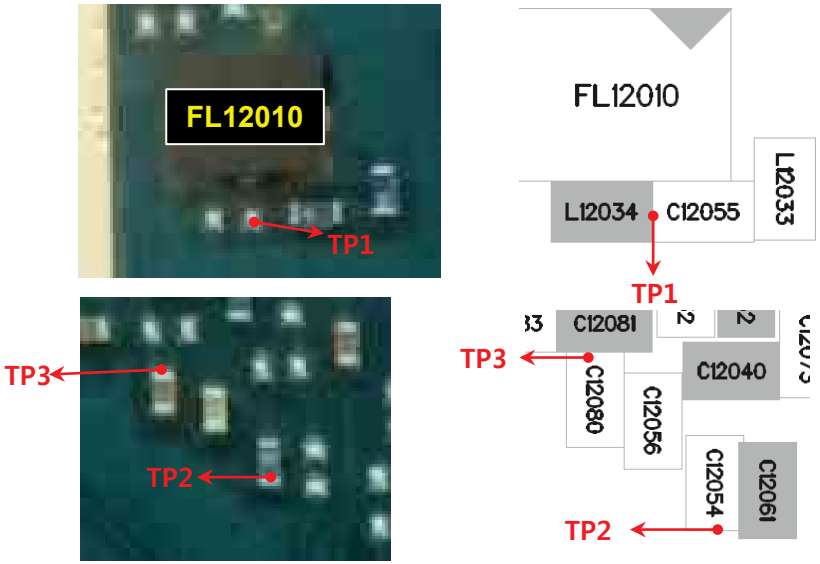

Circuit Diagram

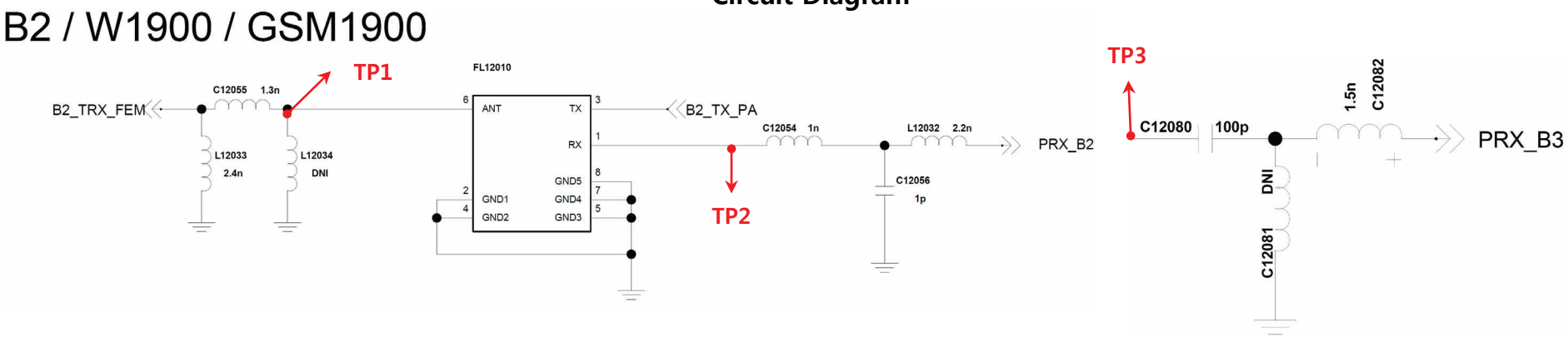

Copyright © 2017 LG Electronics. Inc. All right reserved. Only training and service purposes

3.5 GSM RF PART

3.5.7 Checking GSM PAM DC Power Circuit

Checking Flow

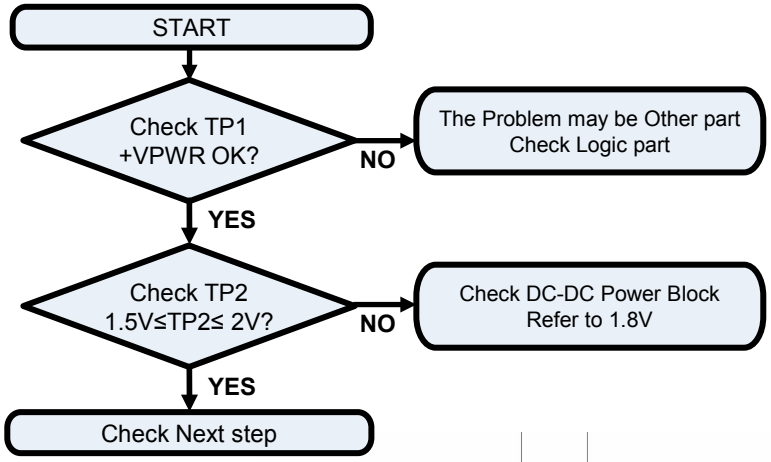

Image

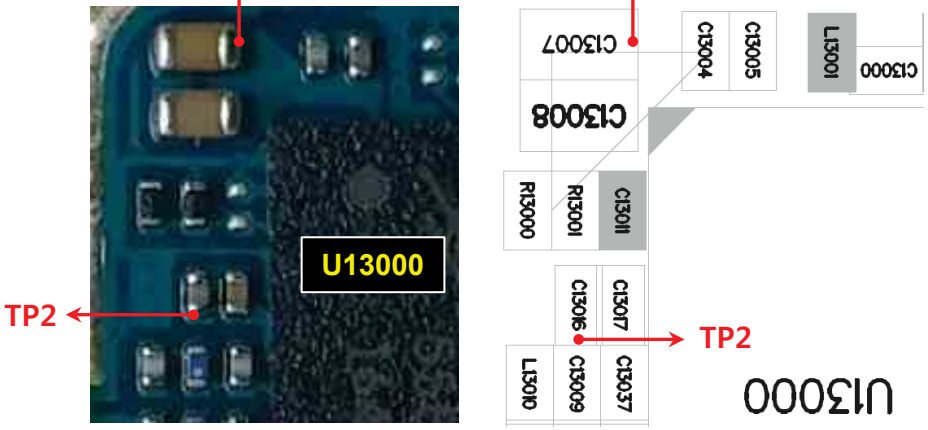

Circuit Diagram

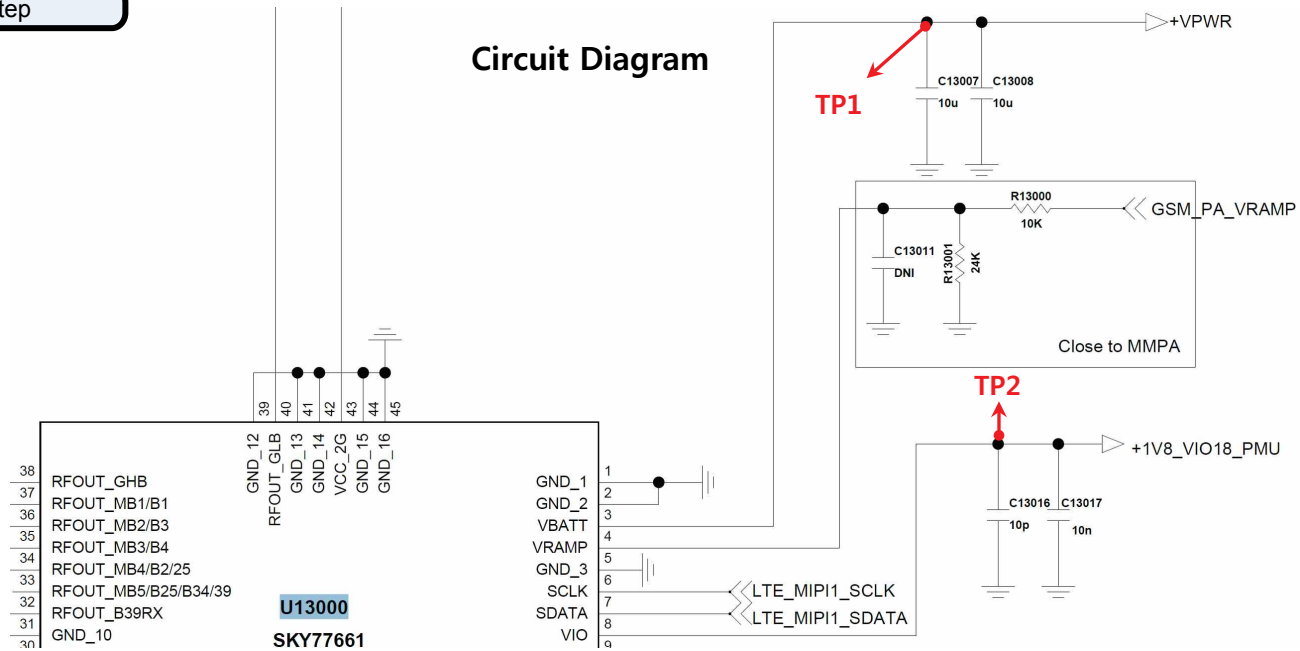

Copyright © 2017 LG Electronics. Inc. All right reserved. Only training and service purposes

3.5 GSM RF PART
3.5.8 Checking RF Signal TX path(GSM850/900)

Checking Flow

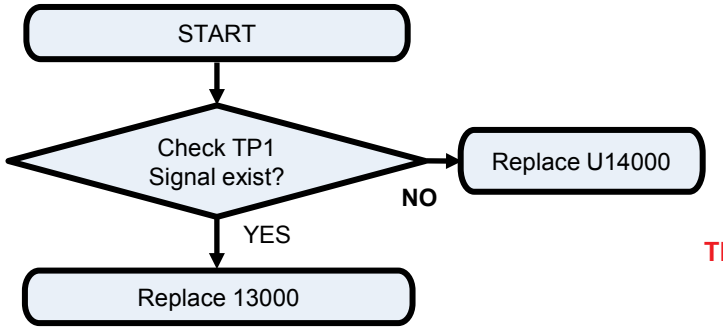

Image

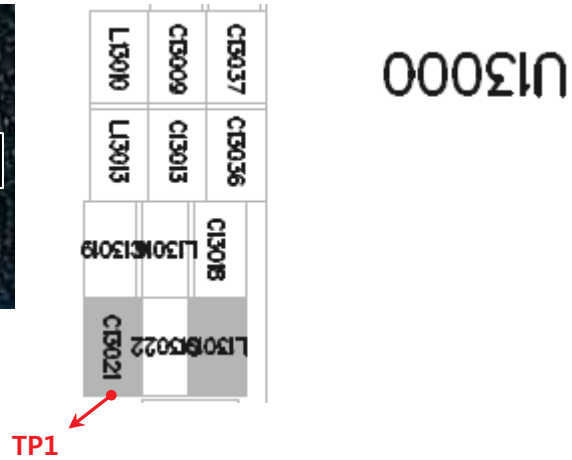

Circuit Diagram

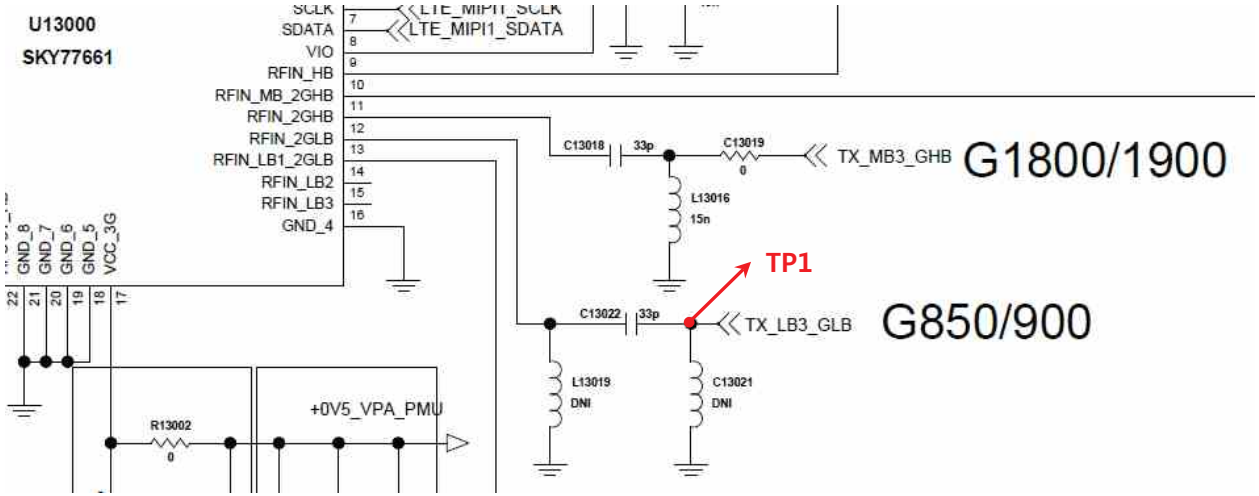

Copyright © 2017 LG Electronics. Inc. All right reserved. Only training and service purposes

3.5 GSM RF PART

3.5.9 Checking RF Signal TX path(GSM1800/1900)

Checking Flow

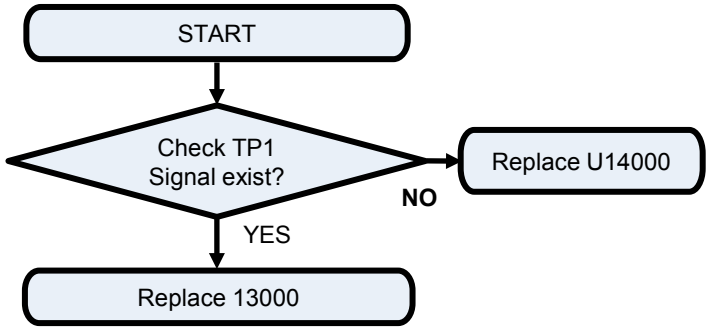

Image

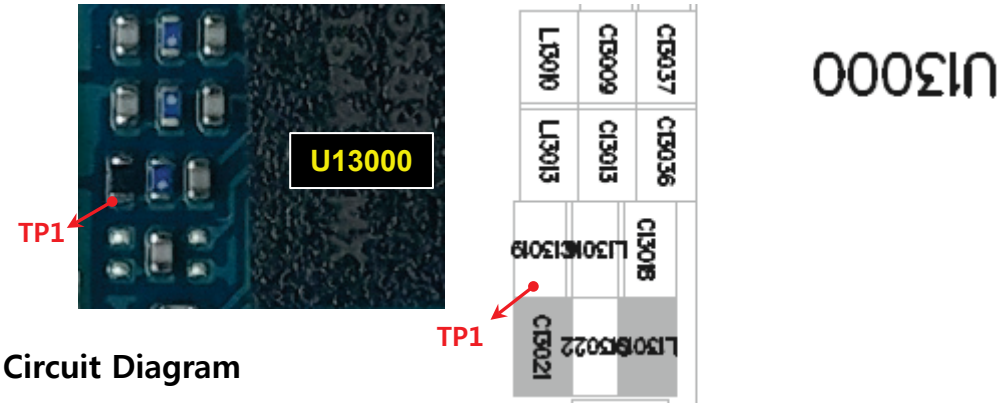

Circuit Diagram

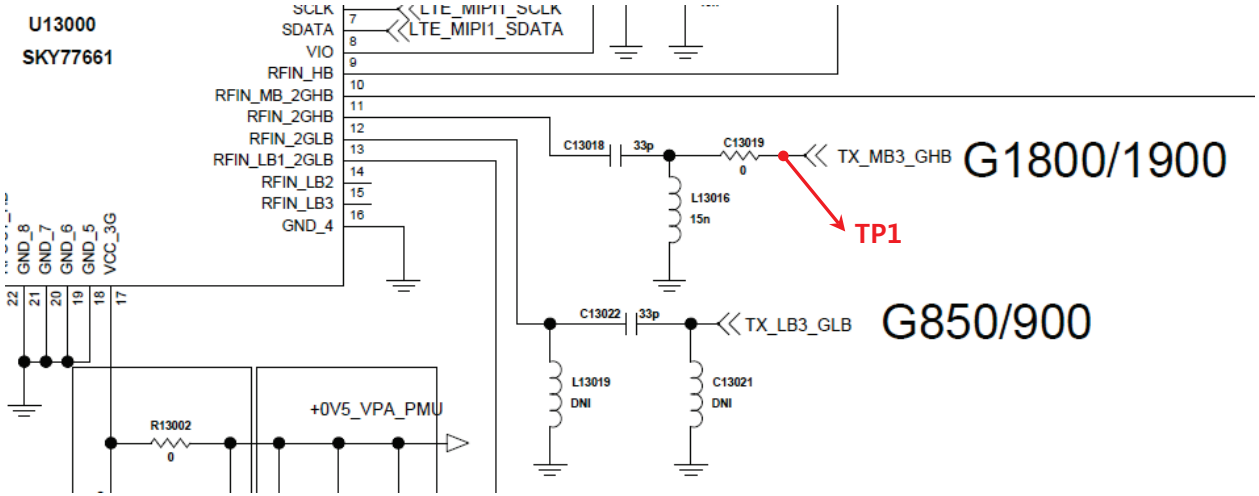

Copyright © 2017 LG Electronics. Inc. All right reserved. Only training and service purposes

3.6 WCDMA RF PART

WCDMA RF Part support WCDMA B1/2/5/8 with ASM, PAM, Transceiver component

Checking Flow

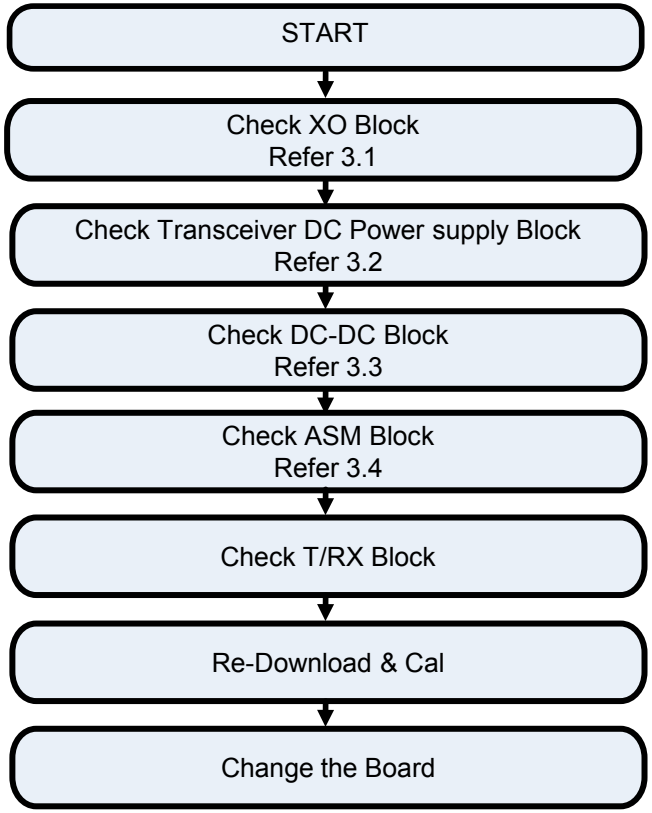

Copyright © 2017 LG Electronics. Inc. All right reserved. Only training and service purposes

3.6 WCDMA RF PART

3.6.2 Checking RF Signal RX path(WCDMA B1)

Checking Flow

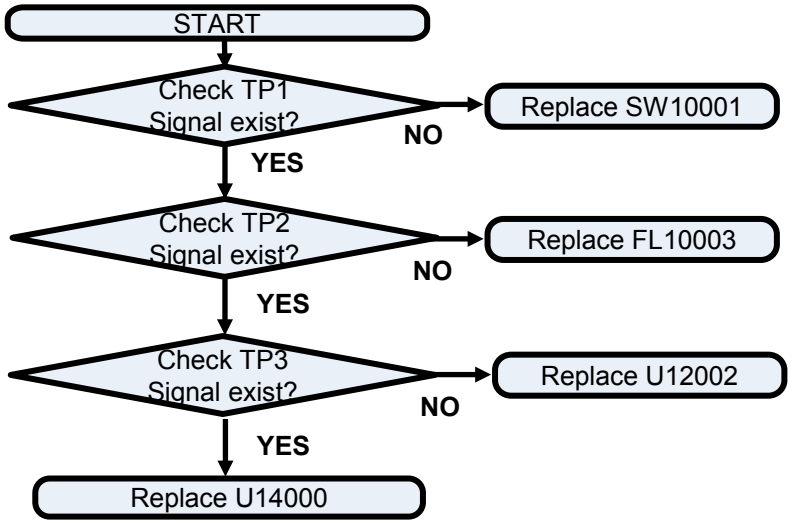

Image

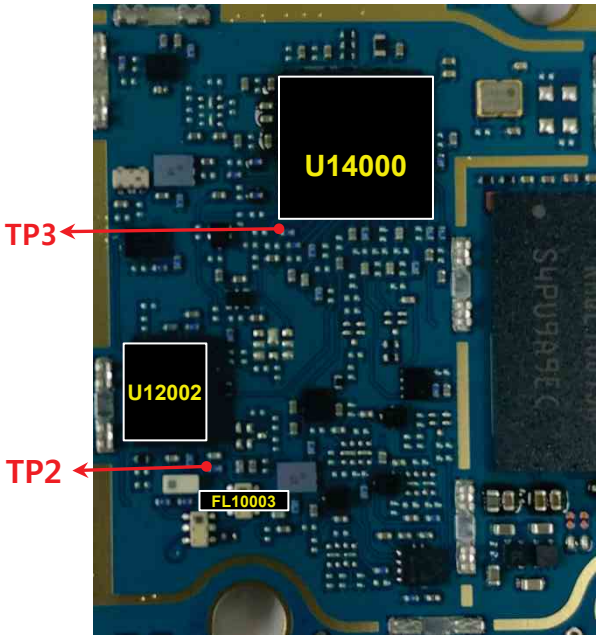

Circuit Diagram

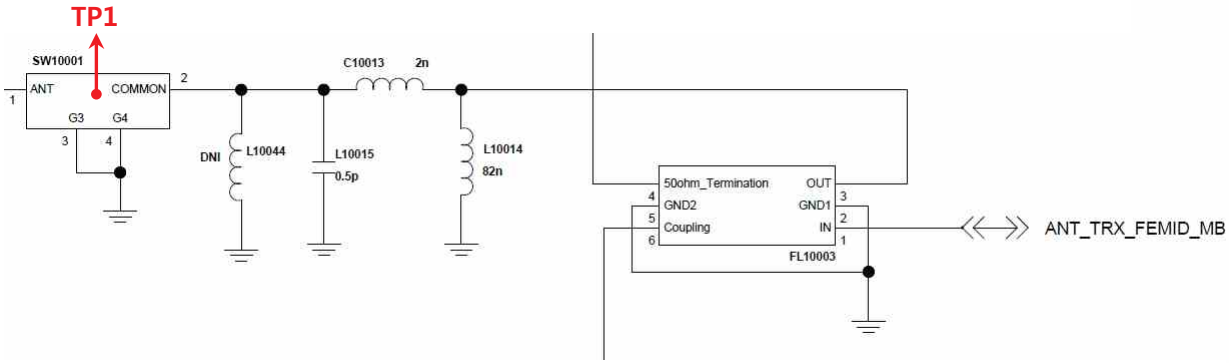

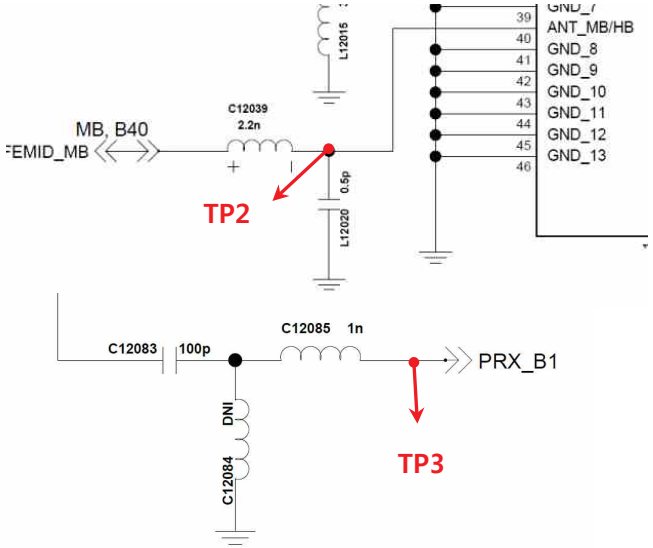

Copyright © 2017 LG Electronics. Inc. All right reserved. Only training and service purposes

3.6 WCDMA RF PART

3.6.2 Checking RF Signal RX path(WCDMA B2)

Checking Flow

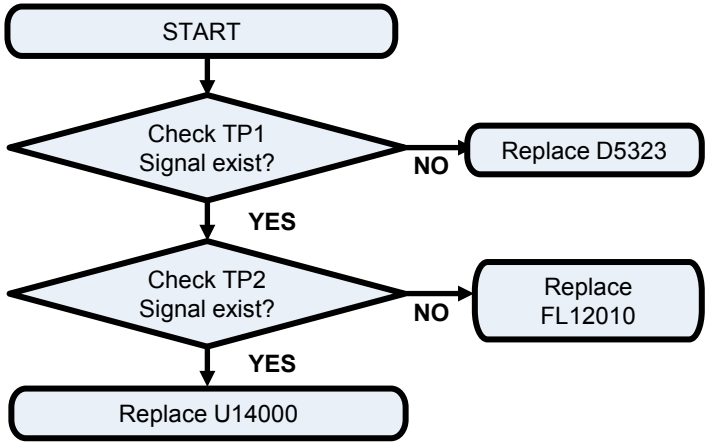

Image

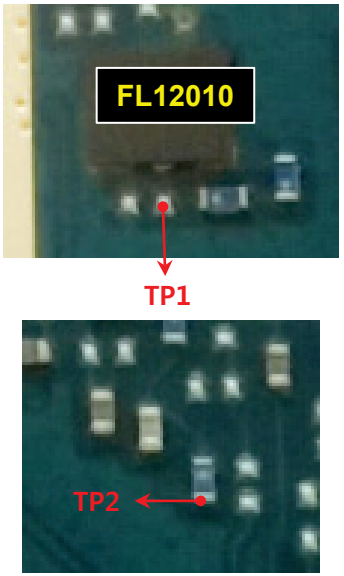

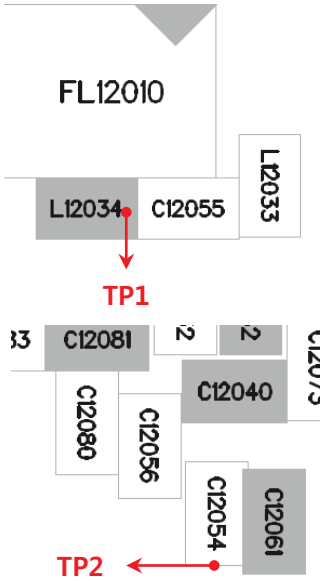

B2 / W1900 / GSM1900

Circuit Diagram

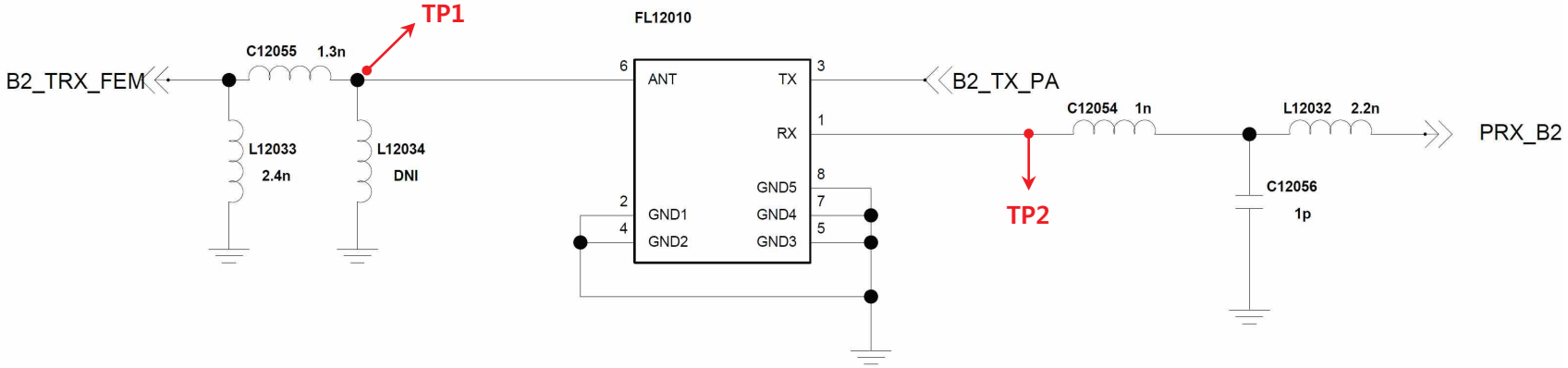

Copyright © 2017 LG Electronics. Inc. All right reserved. Only training and service purposes

3.6 WCDMA RF PART

3.6.2 Checking RF Signal RX path(SW, WCDMA B5/B8)

Checking Flow

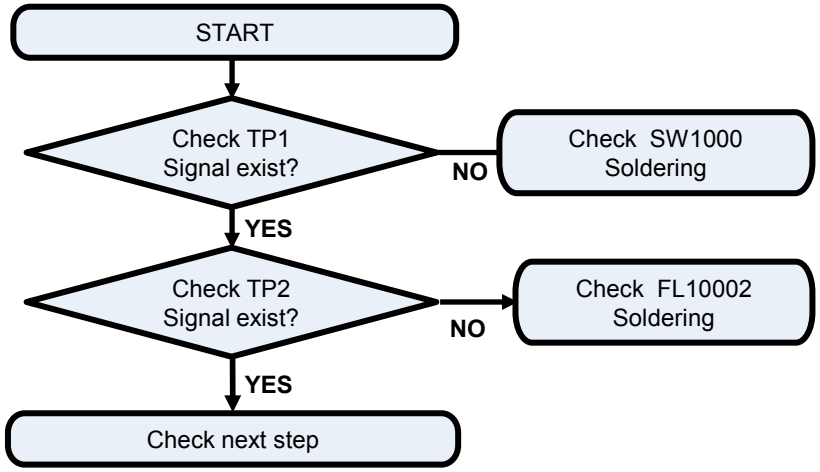

Image

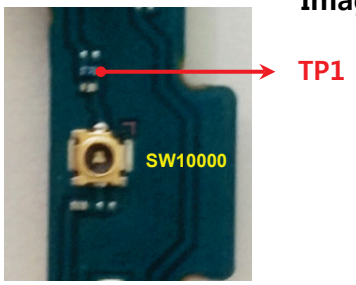

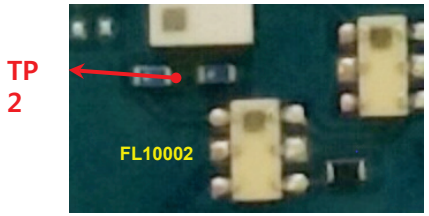

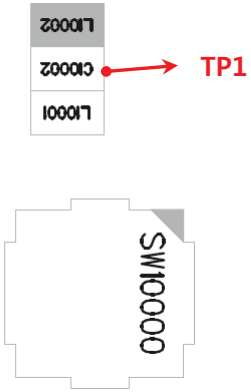

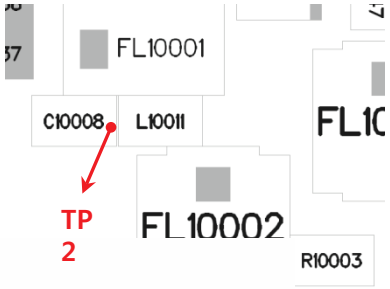

Circuit Diagram

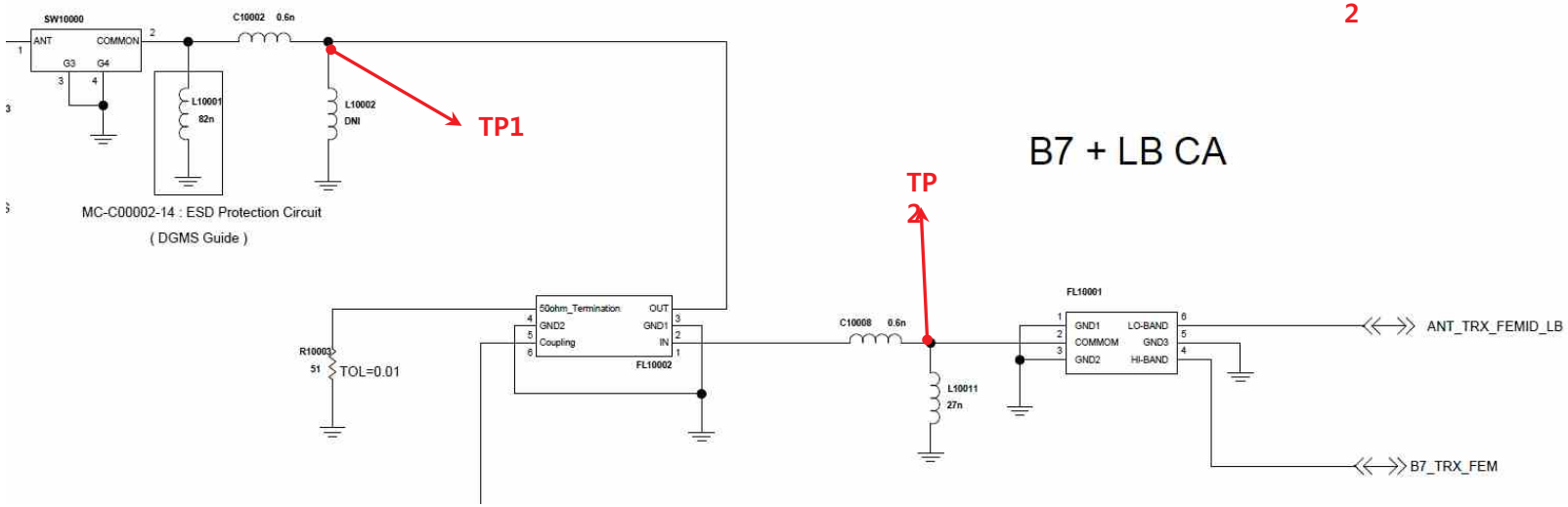

Copyright © 2017 LG Electronics. Inc. All right reserved. Only training and service purposes

3.6 WCDMA RF PART

3.6.2 Checking RF Signal RX path(SW, WCDMA B5/B8)

Checking Flow

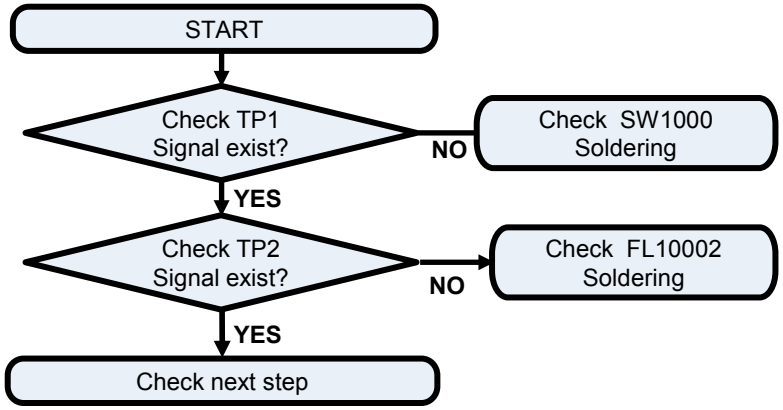

Image

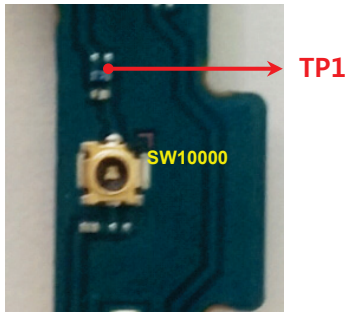

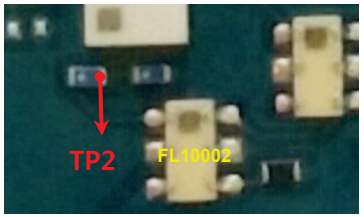

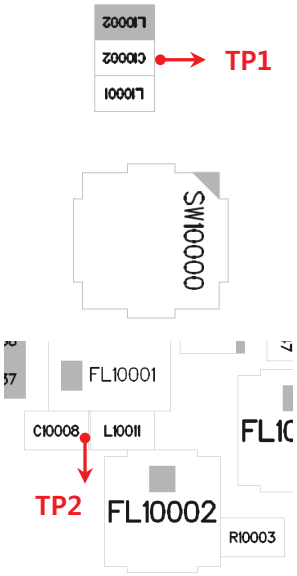

Circuit Diagram

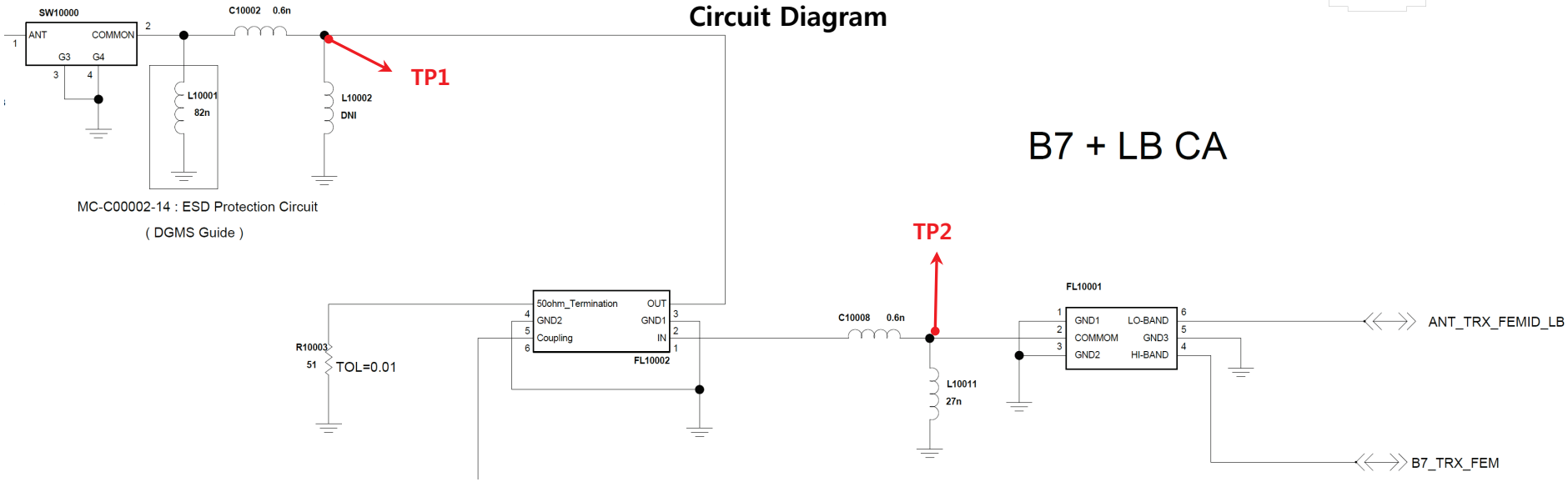

Copyright © 2017 LG Electronics. Inc. All right reserved. Only training and service purposes

3.6 WCDMA RF PART

3.6.2 Checking RF Signal RX path(WCDMA B5/B8)

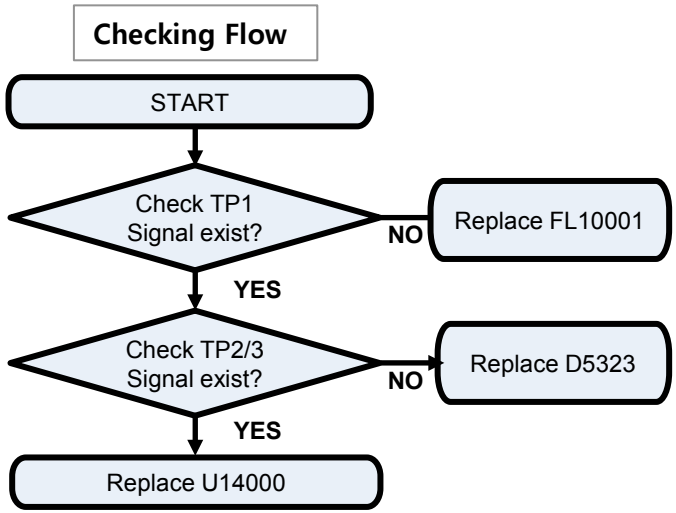

Image

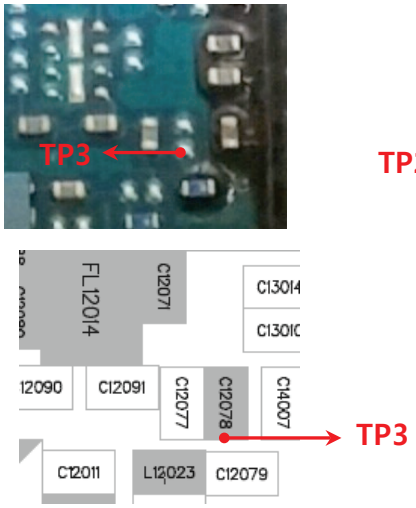

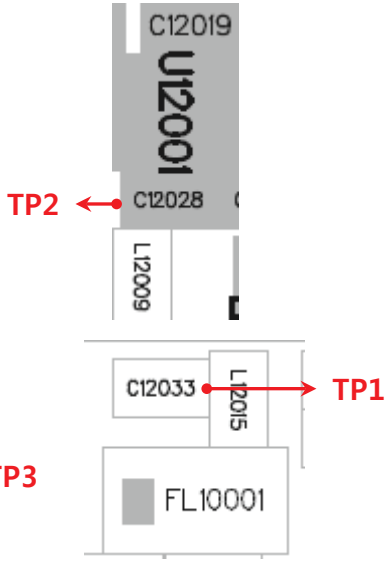

Circuit Diagram

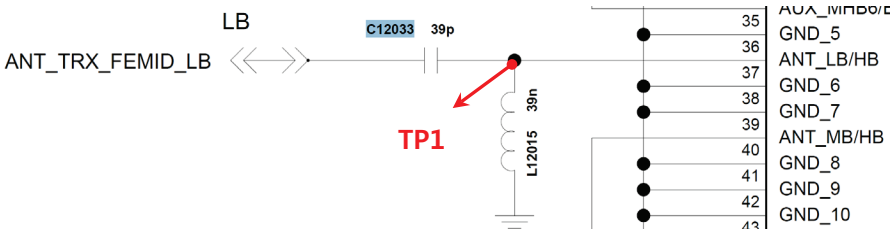

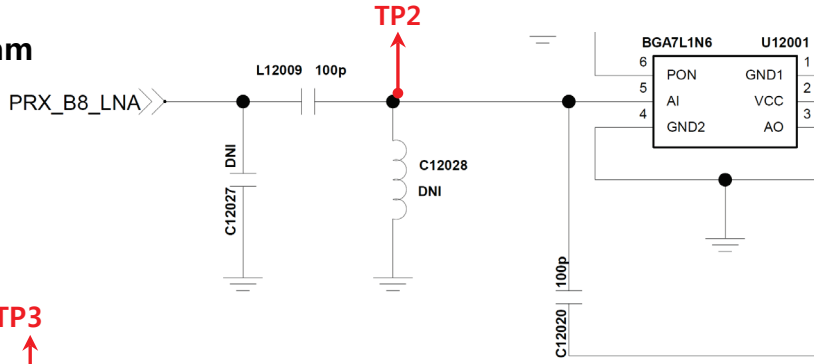

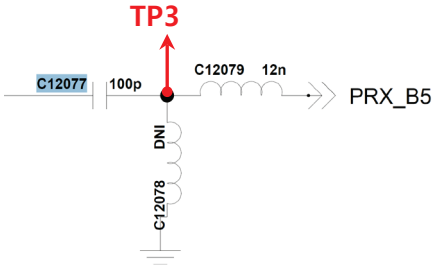

Copyright © 2017 LG Electronics. Inc. All right reserved. Only training and service purposes

3.6 WCDMA RF PART

3.6.5 Checking RF Signal TX path(WCDMA B1/B2)

Checking Flow

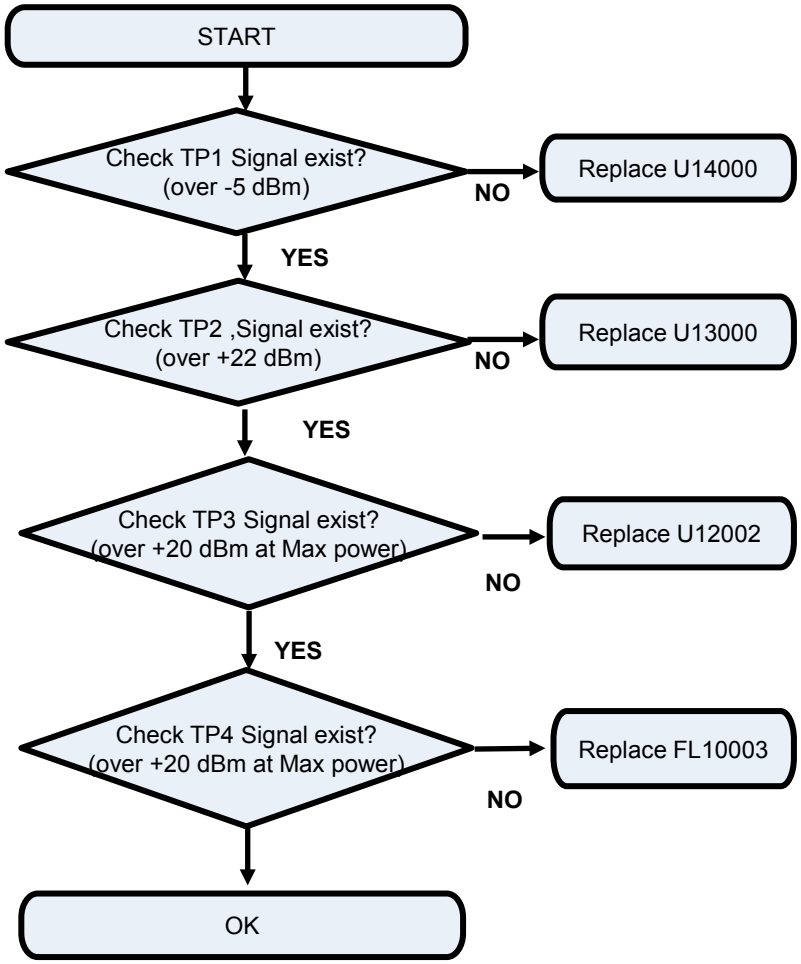

Image

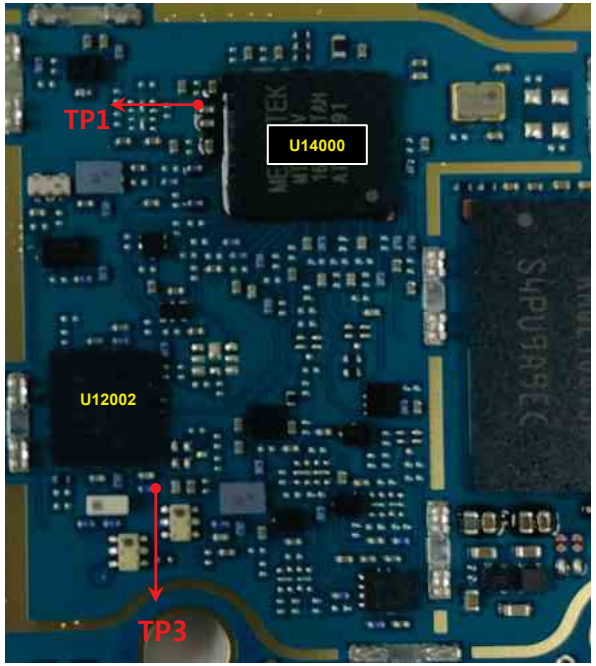

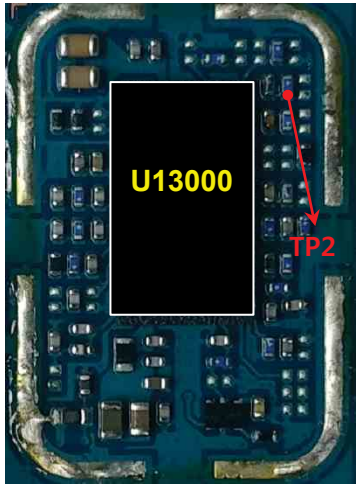

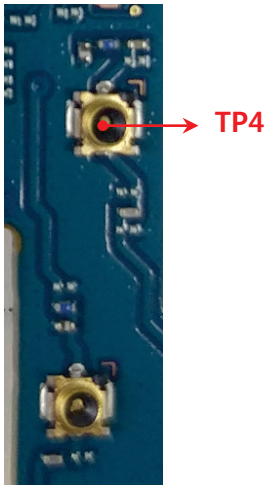

Copyright © 2017 LG Electronics. Inc. All right reserved. Only training and service purposes

3.6.5 Checking RF Signal TX path(WCDMA B1/B2)

Circuit Diagram

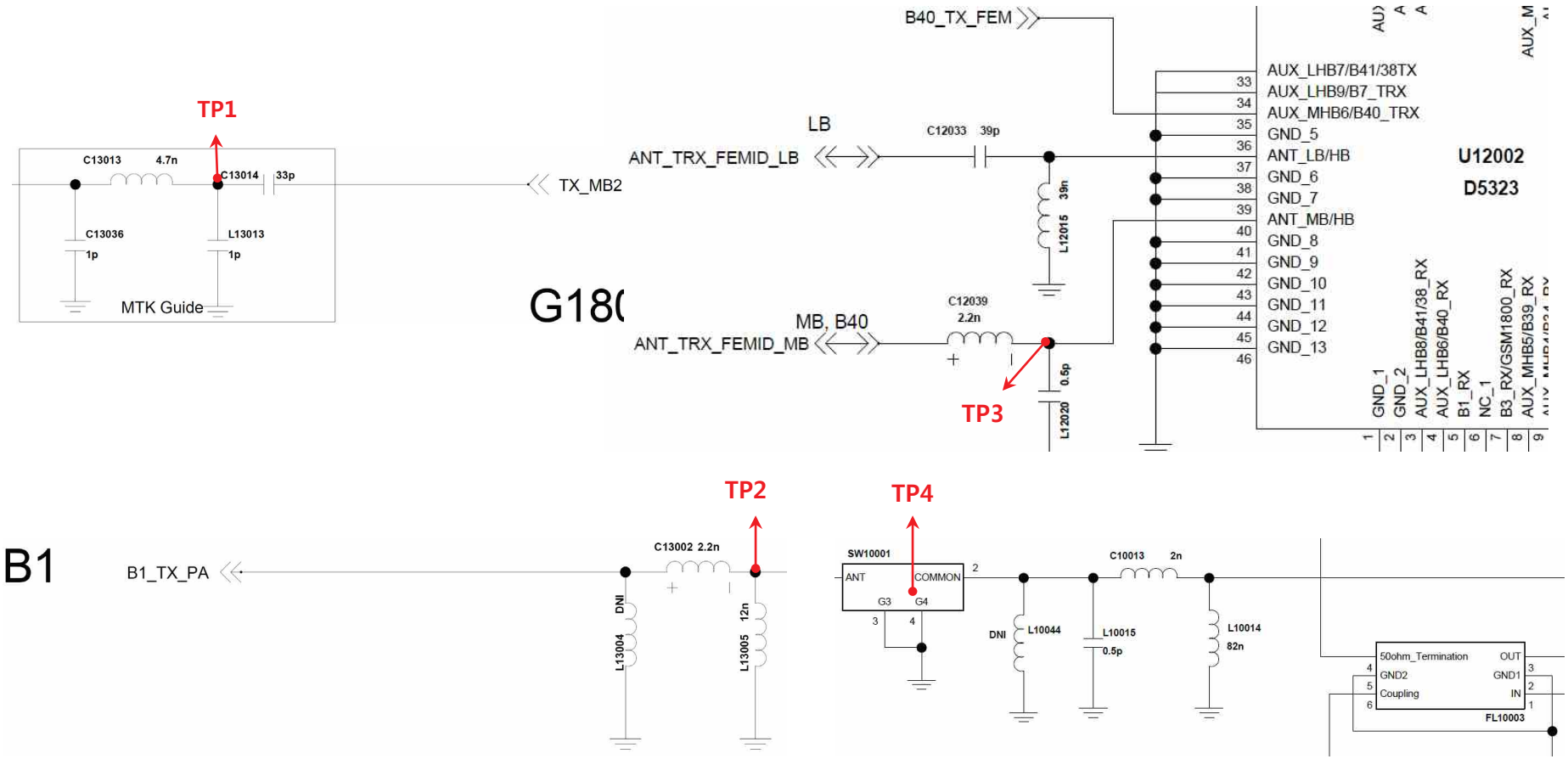

Copyright © 2017 LG Electronics. Inc. All right reserved. Only training and service purposes

3.6 WCDMA RF PART

3.6.5 Checking RF Signal TX path(WCDMA B5/B8)

Checking Flow

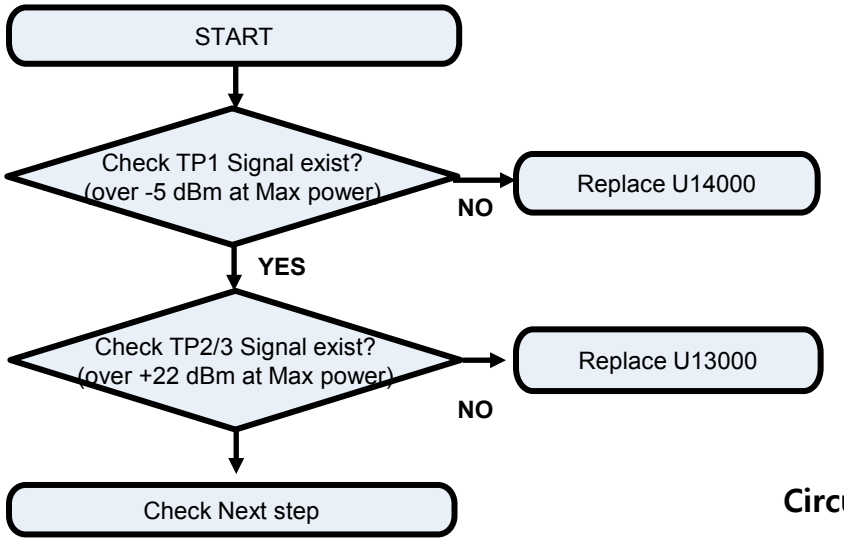

Image

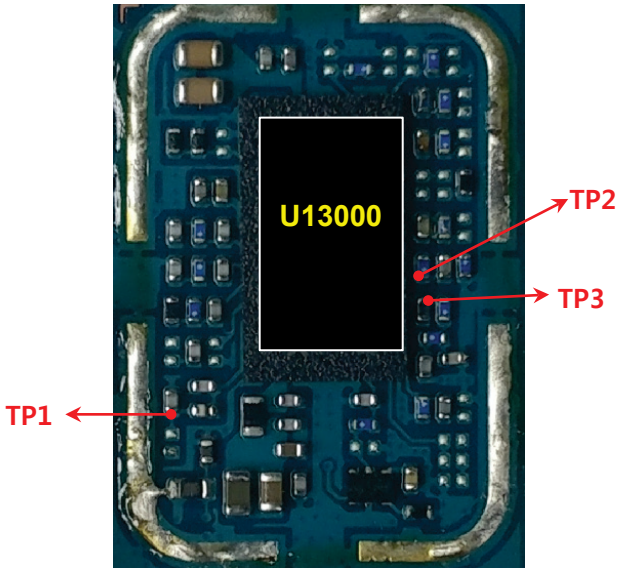

Circuit Diagram

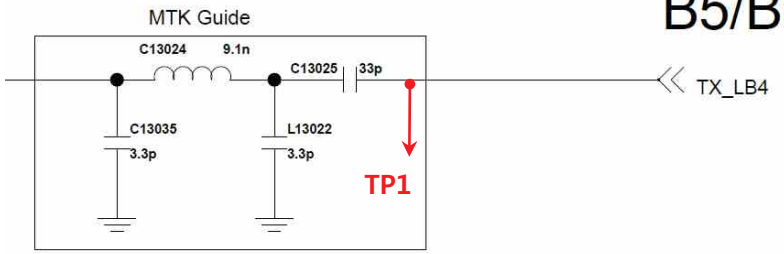

B5/B8/B17/B2(

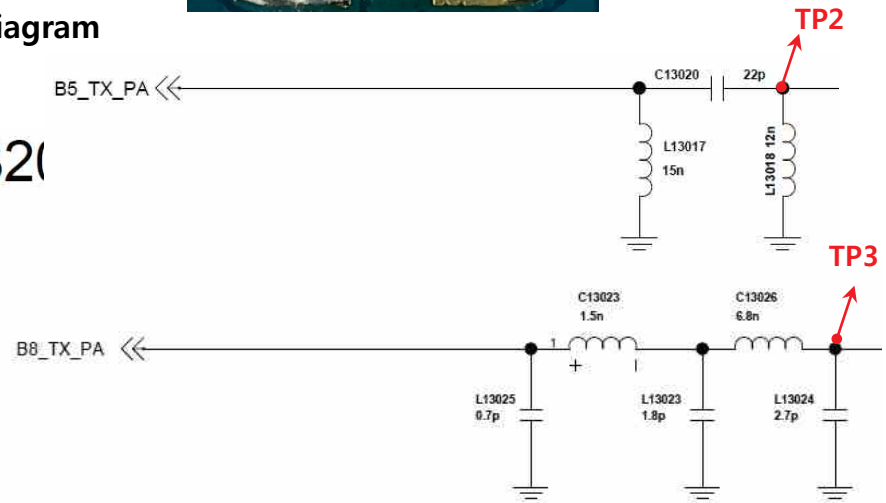

Copyright © 2017 LG Electronics. Inc. All right reserved. Only training and service purposes

3.7 LTE RF PART

LTE RF Part support LTE B1/3/7/8/20 with ASM, PAM, Transceiver component

Checking Flow

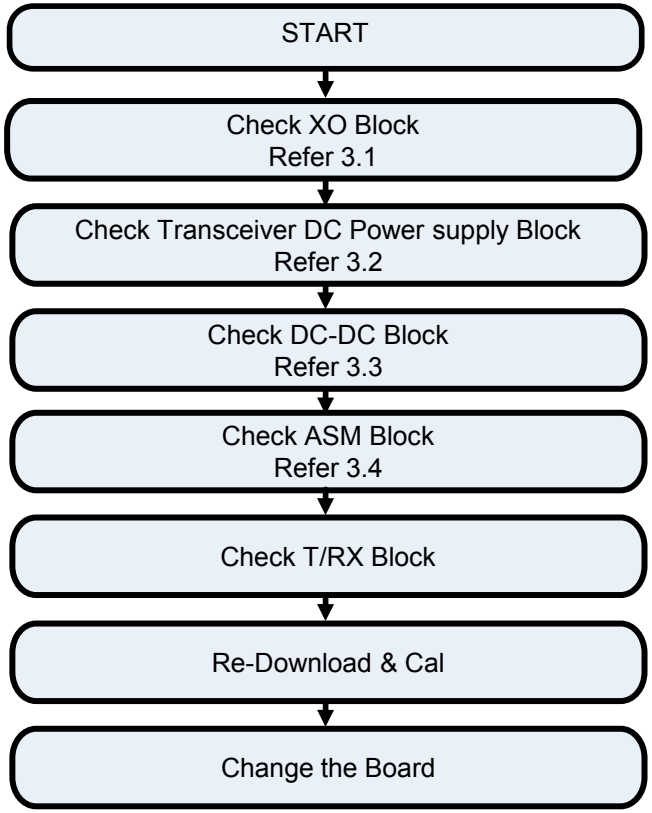

Copyright © 2017 LG Electronics. Inc. All right reserved. Only training and service purposes

3.7 LTE RF PART

3.7.2 Checking RF Signal RX path(LTE B1)

Checking Flow

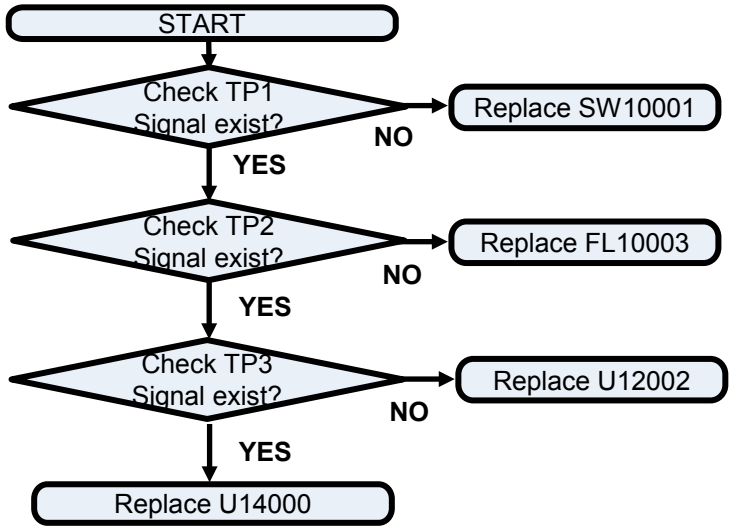

Image

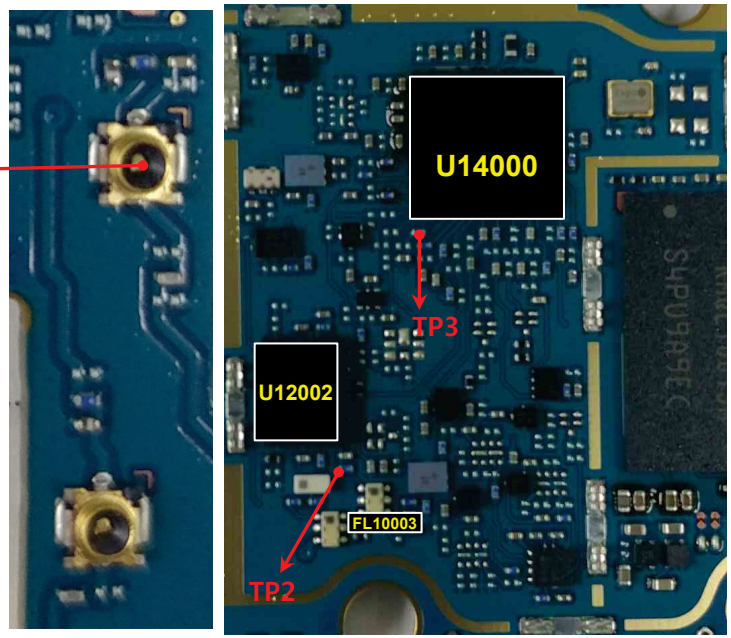

Circuit Diagram

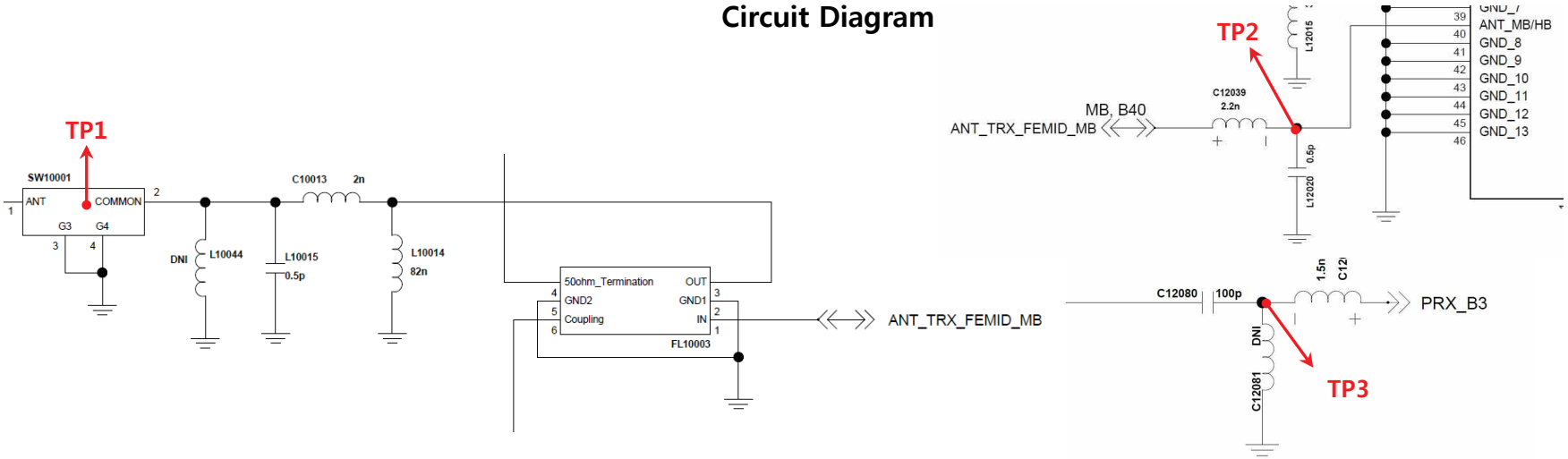

Copyright © 2017 LG Electronics. Inc. All right reserved. Only training and service purposes

3.7 LTE RF PART
3.7.2 Checking RF Signal RX path(LTE B3)

Checking Flow

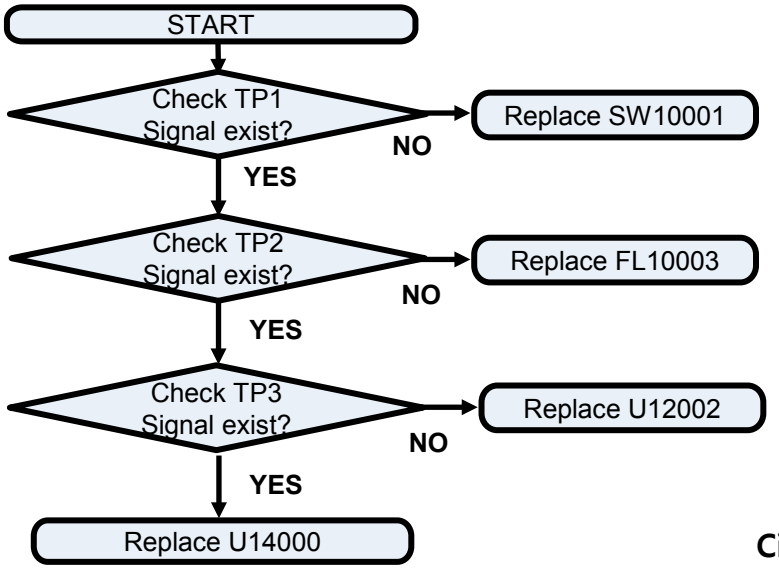

Image

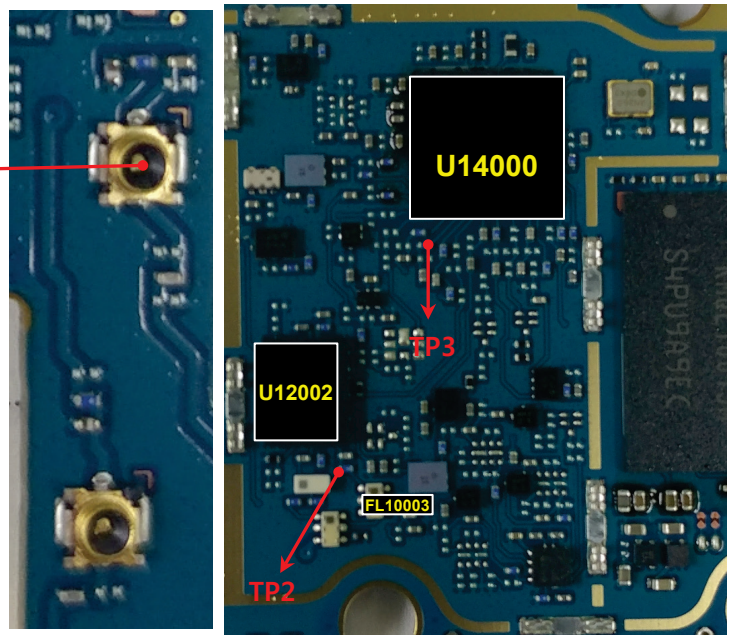

Circuit Diagram

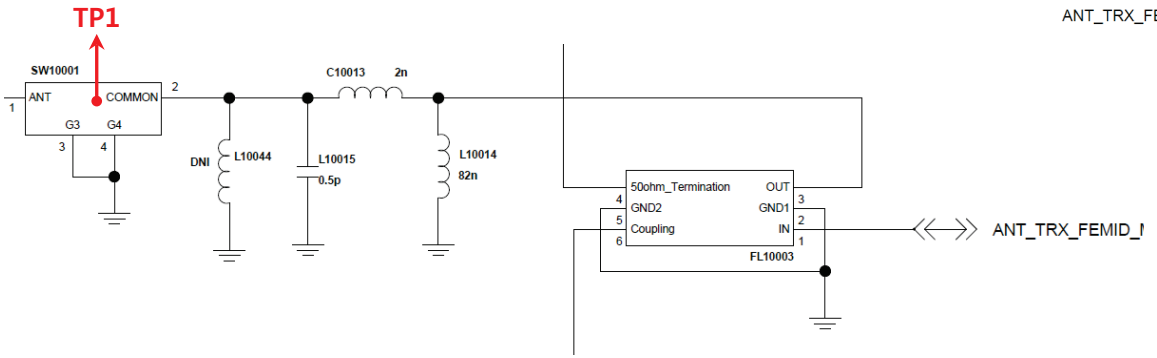

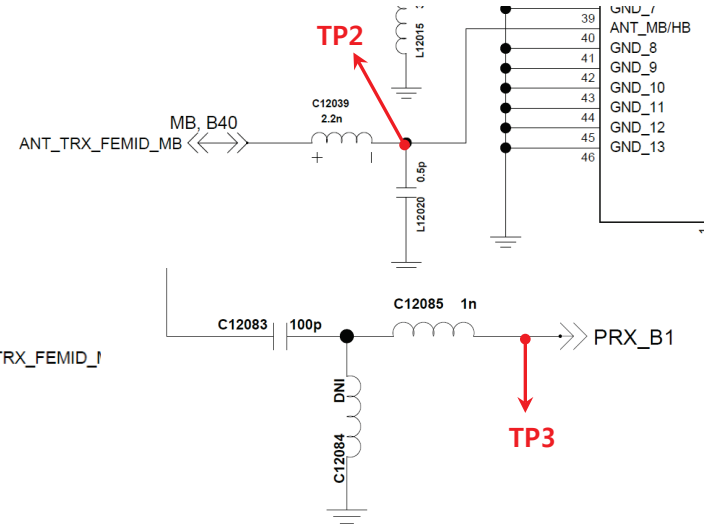

Copyright © 2017 LG Electronics. Inc. All right reserved. Only training and service purposes

3.7 LTE RF PART
3.7.2 Checking RF Signal RX path(LTE B7)

Checking Flow

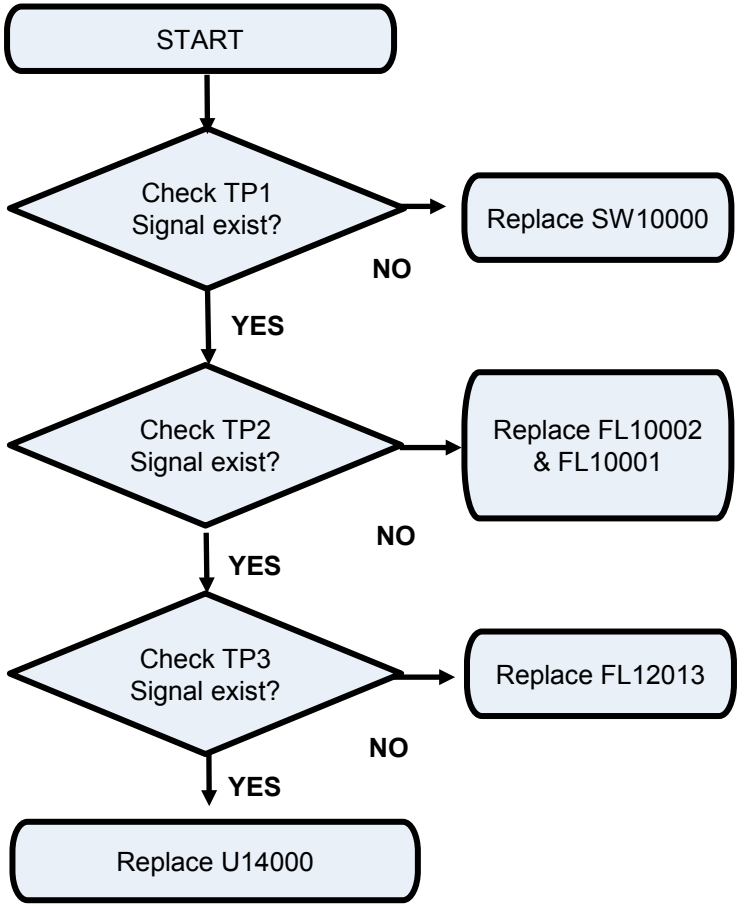

Image

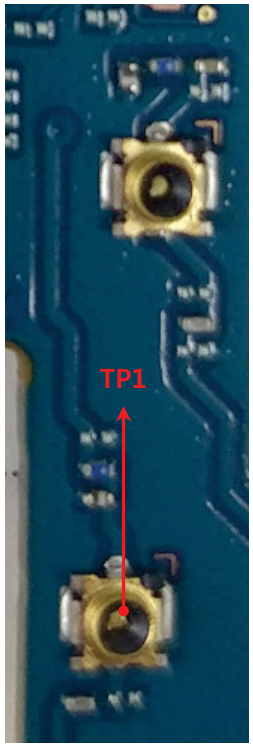

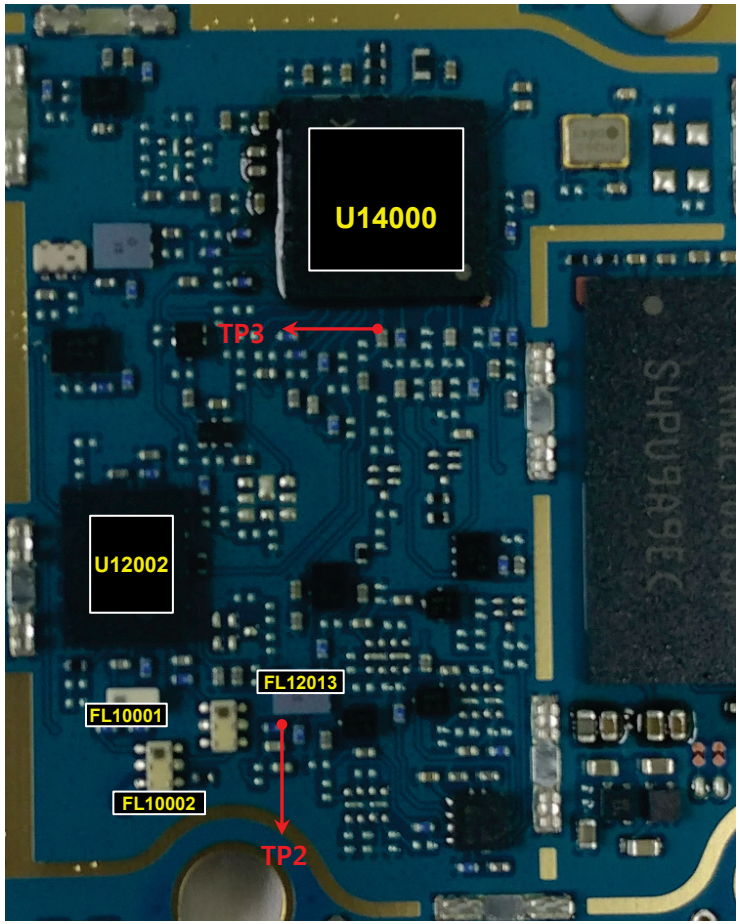

Copyright © 2017 LG Electronics. Inc. All right reserved. Only training and service purposes

3.7 LTE RF PART

3.7.2 Checking RF Signal RX path(LTE B7)

Circuit Diagram

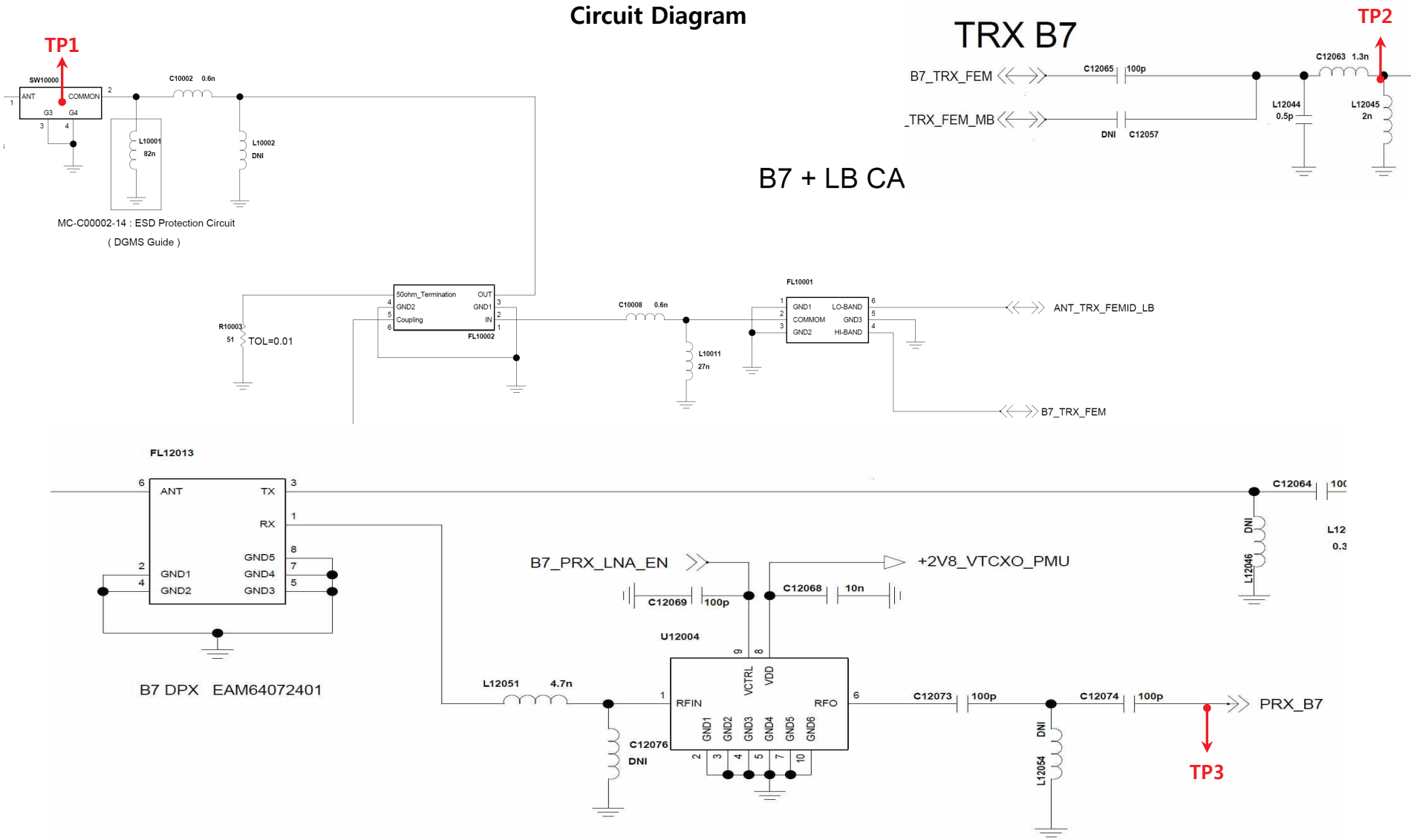

Copyright © 2017 LG Electronics. Inc. All right reserved. Only training and service purposes

3.7 LTE RF PART
3.7.2 Checking RF Signal RX path(LTE B8)

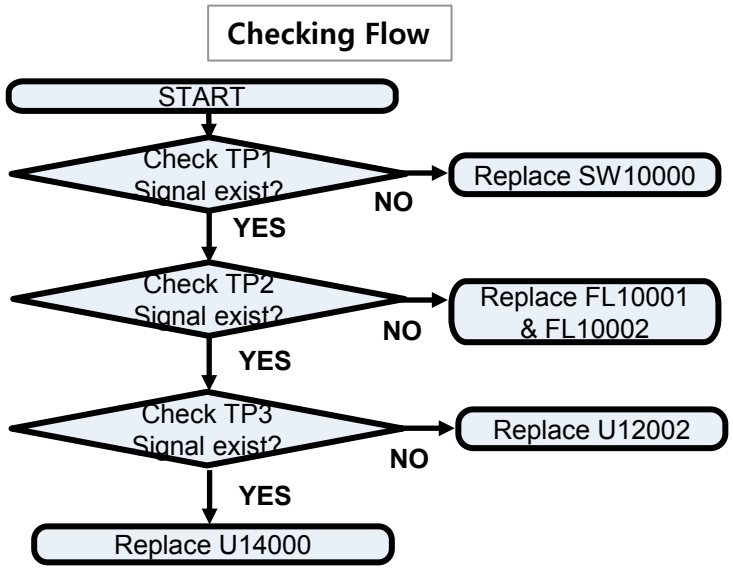

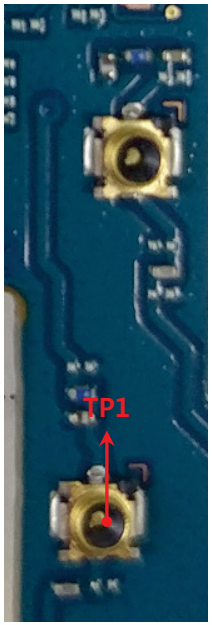

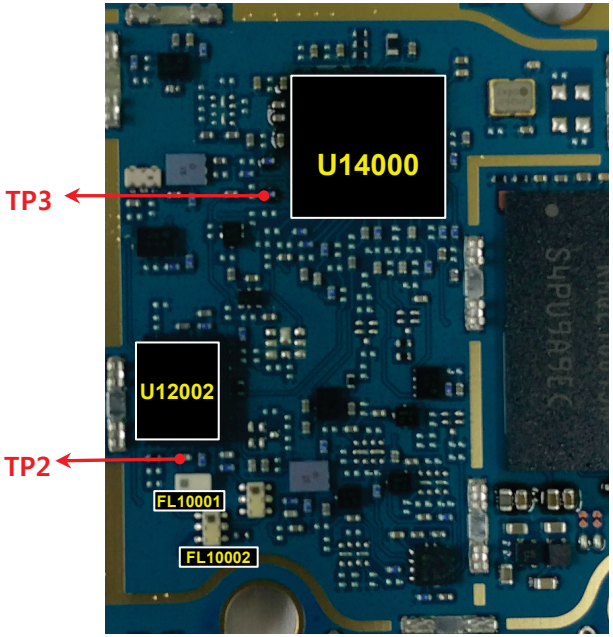

Circuit Diagram

B7 + LB CA

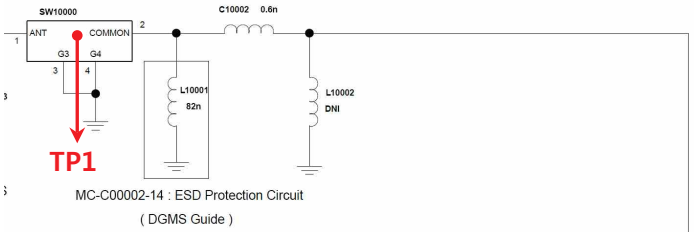

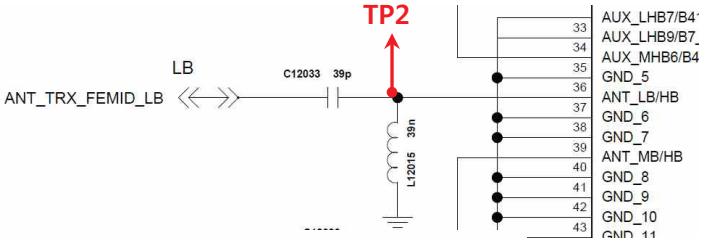

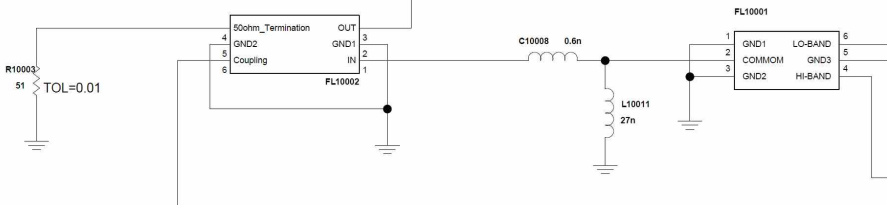

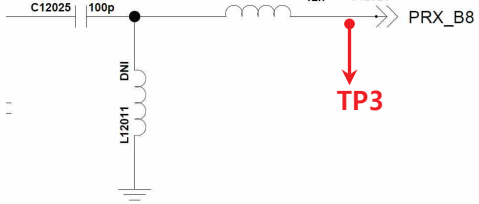

Copyright © 2017 LG Electronics. Inc. All right reserved. Only training and service purposes

3.7 LTE RF PART

3.7.2 Checking RF Signal RX path(LTE B20)

Checking Flow

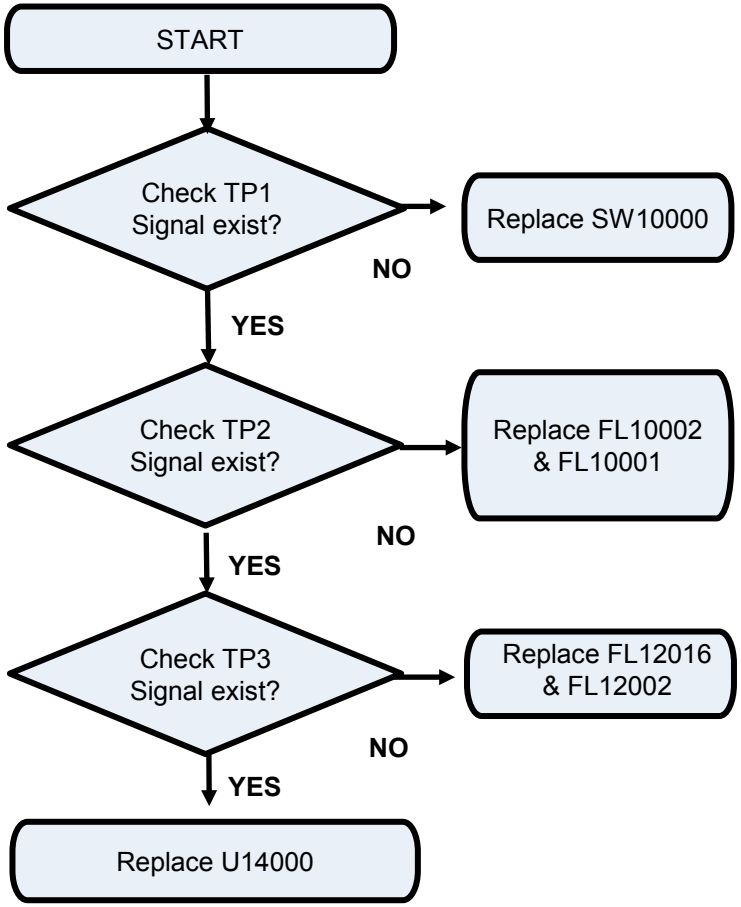

Image

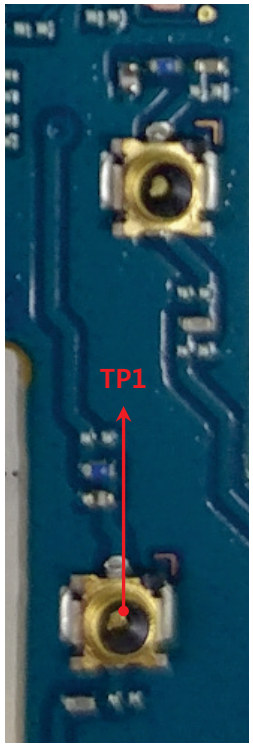

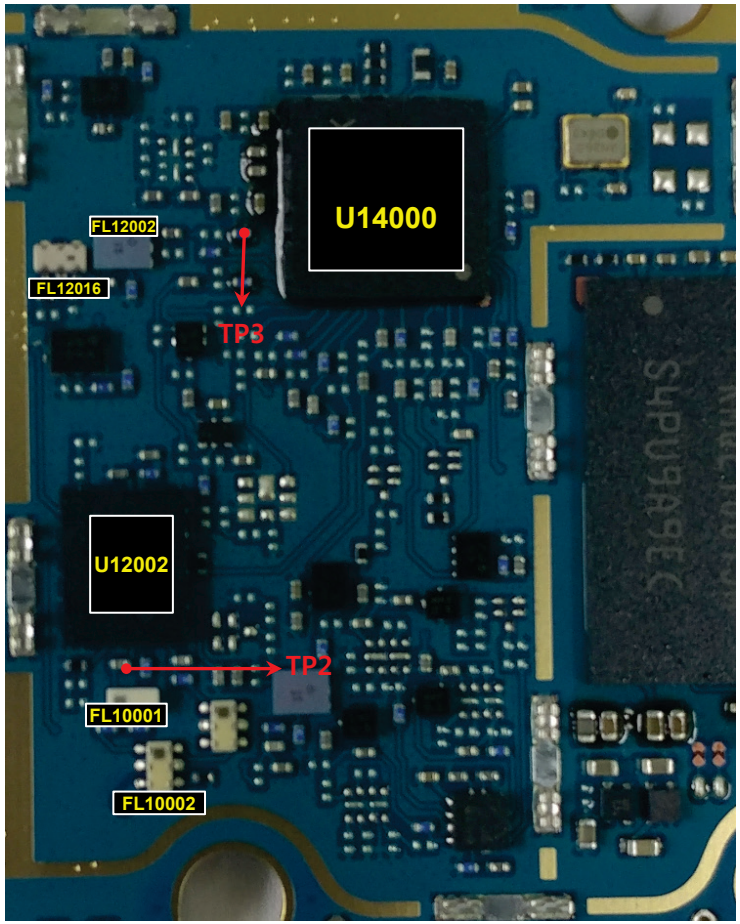

Copyright © 2017 LG Electronics. Inc. All right reserved. Only training and service purposes

3.7 LTE RF PART
3.7.2 Checking RF Signal RX path(LTE B20)

Circuit Diagram

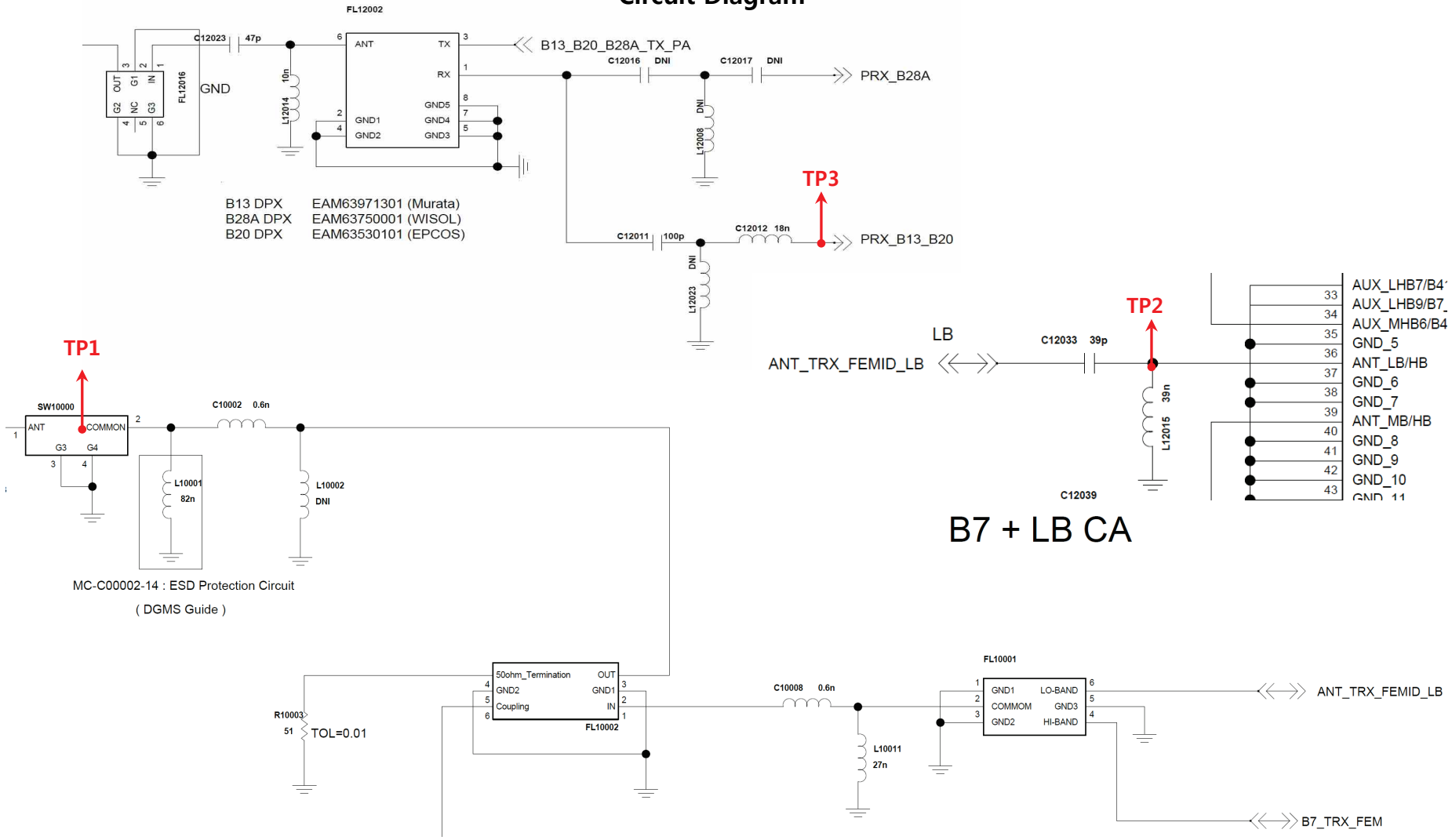

Copyright © 2017 LG Electronics. Inc. All right reserved. Only training and service purposes

3.7 LTE RF PART
3.7.8 Checking RF Signal DRX path(LTE B1)

Checking Flow

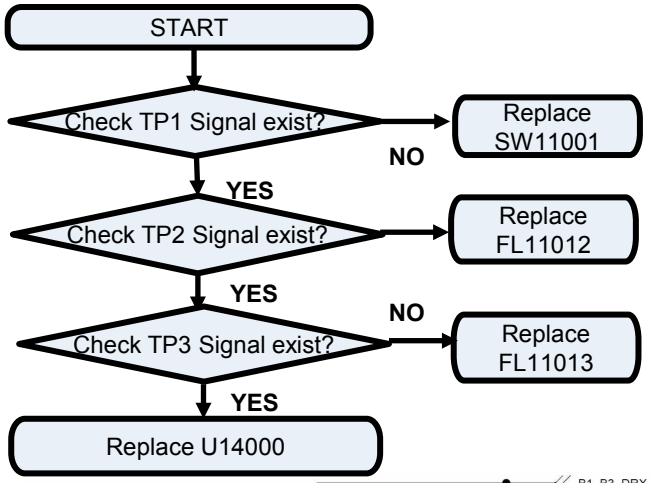

Image

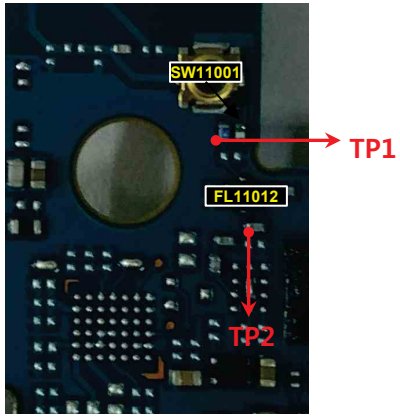

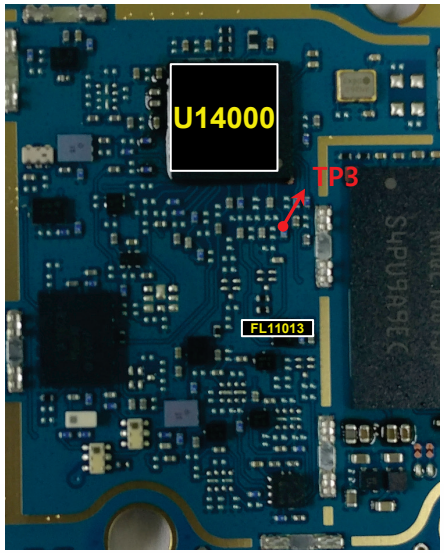

Circuit Diagram

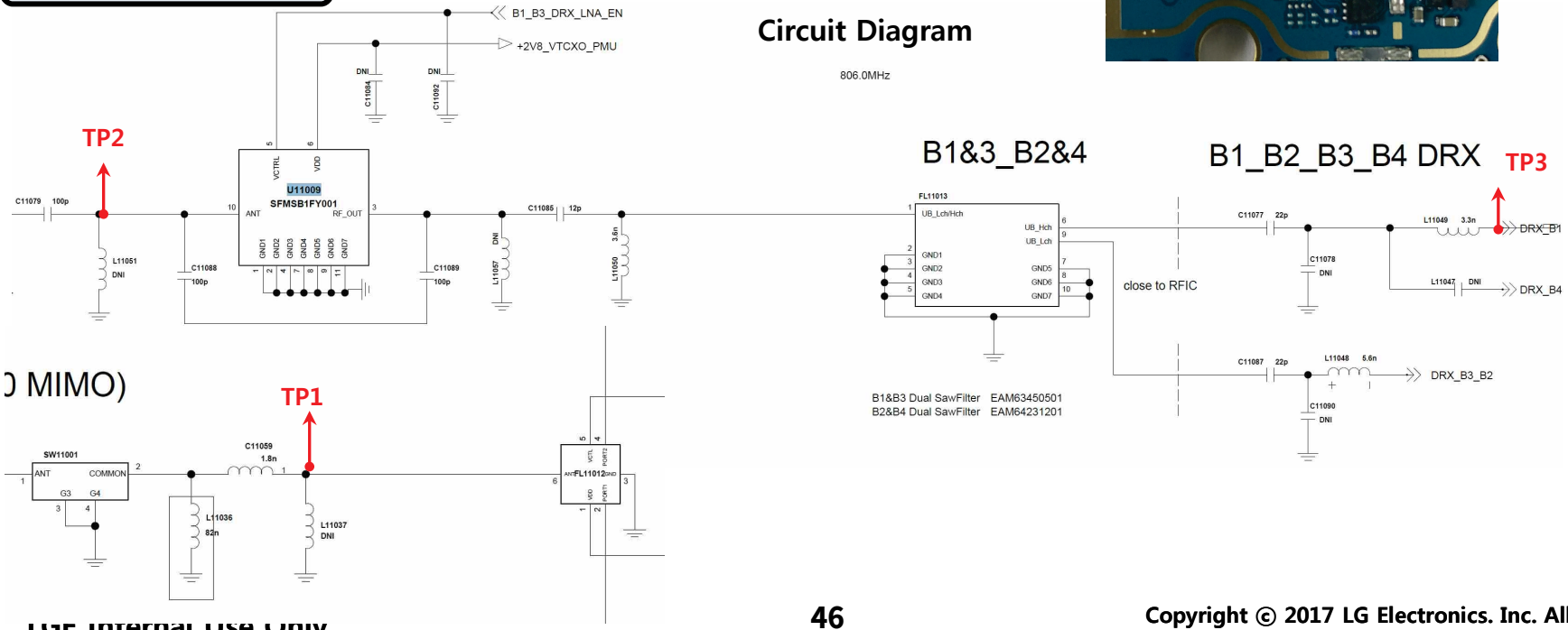

Copyright © 2017 LG Electronics. Inc. All right reserved. Only training and service purposes

3.7 LTE RF PART
3.7.8 Checking RF Signal DRX path(LTE B3)

Checking Flow

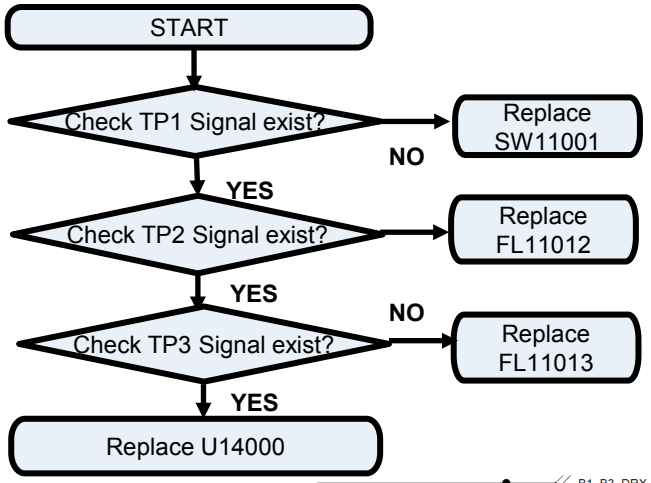

Image

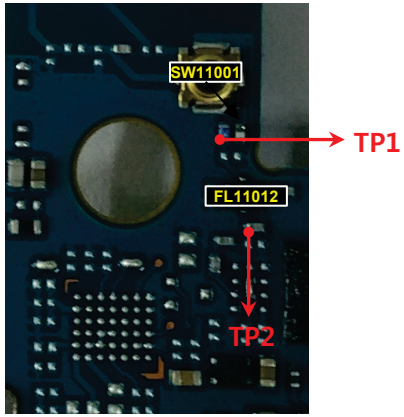

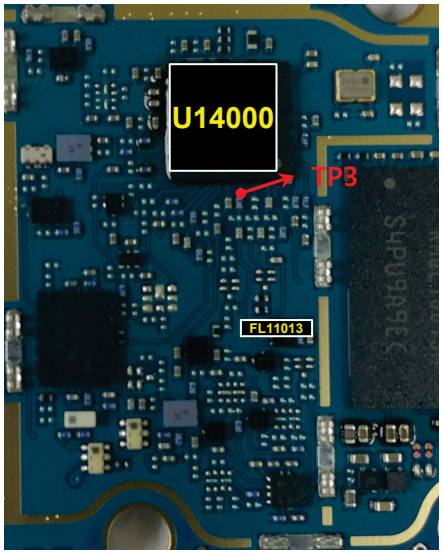

Circuit Diagram

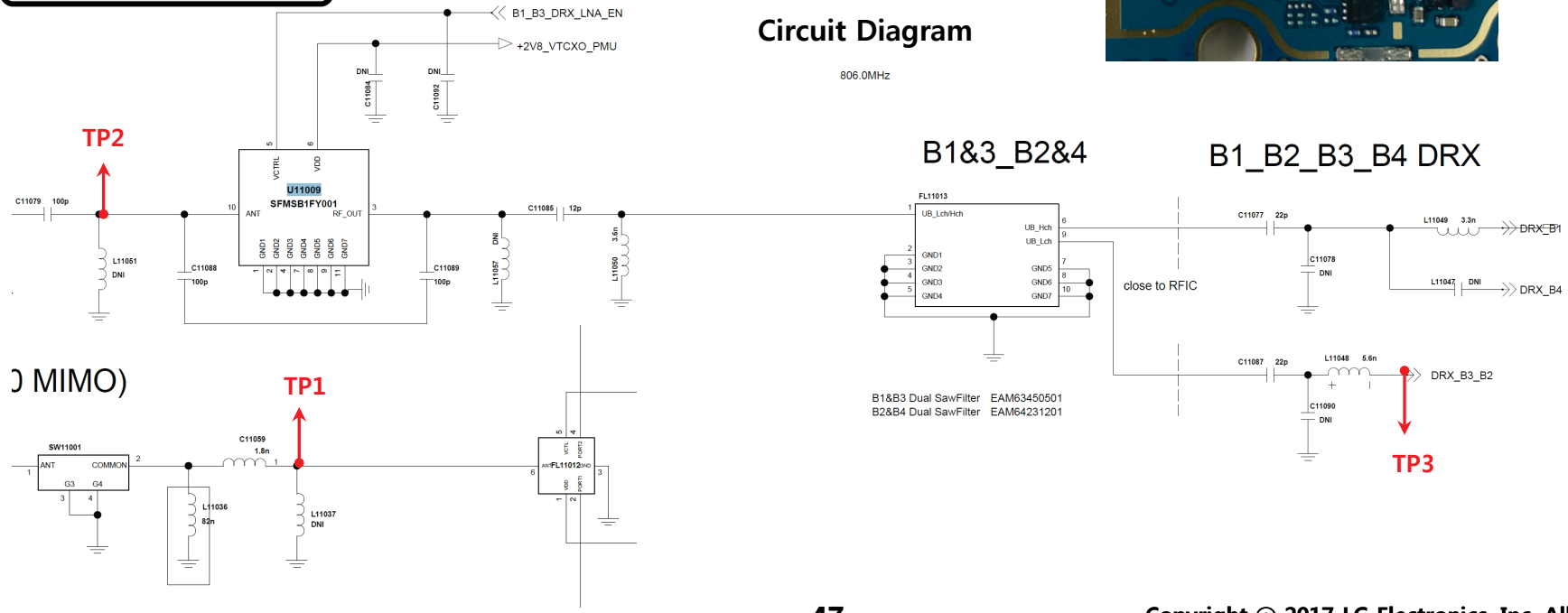

Copyright © 2017 LG Electronics. Inc. All right reserved. Only training and service purposes

3.7 LTE RF PART
3.7.8 Checking RF Signal DRX path(LTE B7)

Checking Flow

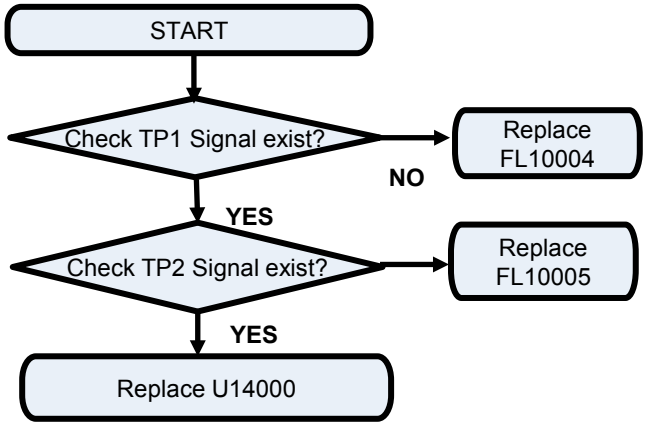

Image

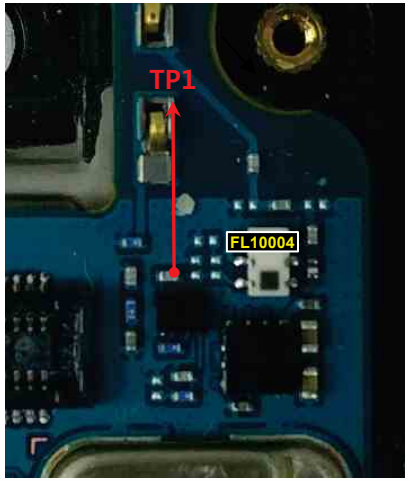

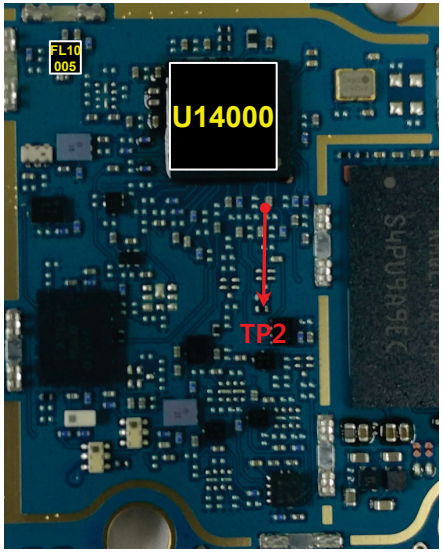

Circuit Diagram

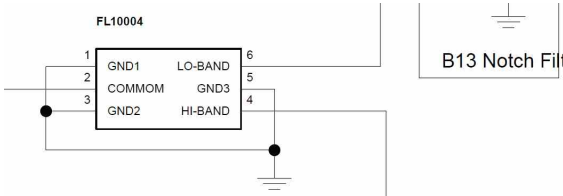

Circuit Diagram

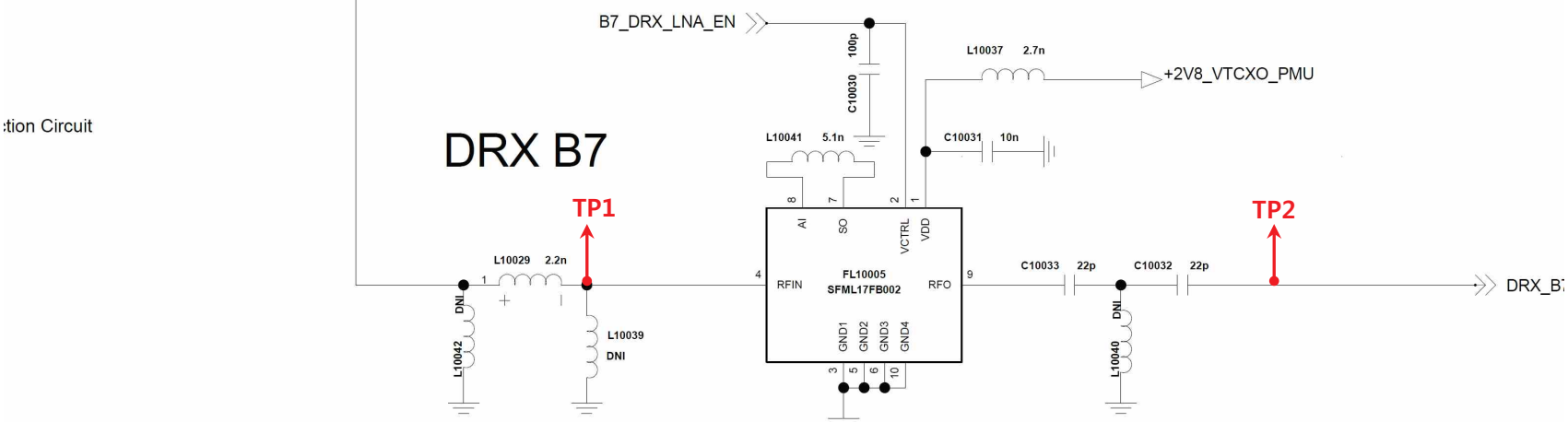

Copyright © 2017 LG Electronics. Inc. All right reserved. Only training and service purposes

3.7 LTE RF PART
3.7.8 Checking RF Signal DRX path(LTE B8)

Checking Flow

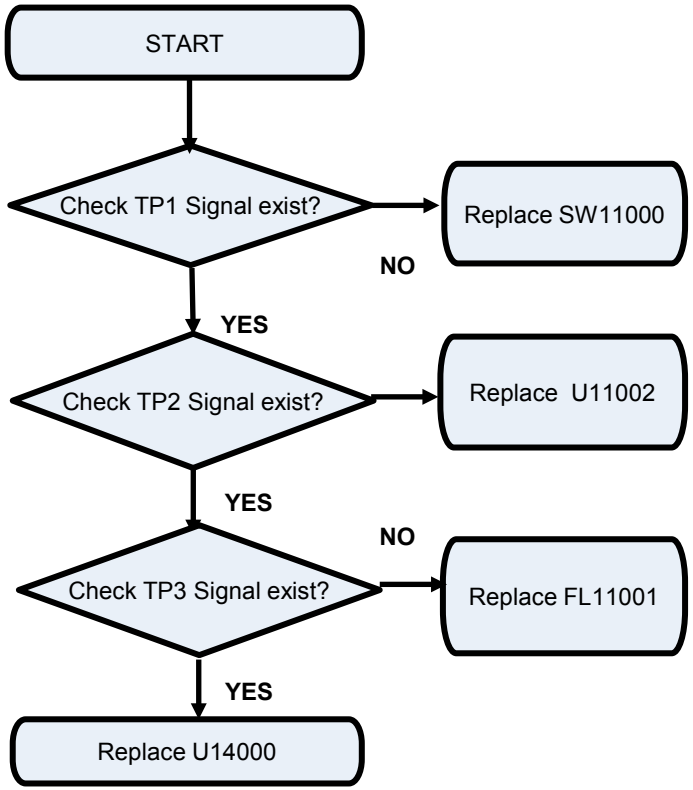

Image

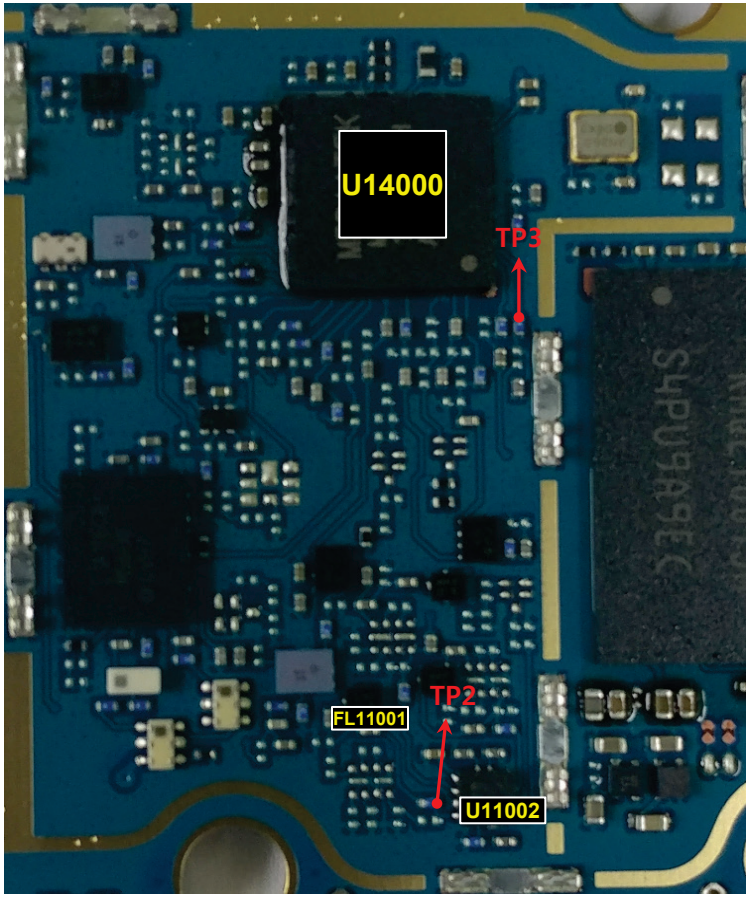

Copyright © 2017 LG Electronics. Inc. All right reserved. Only training and service purposes

3.7 LTE RF PART
3.7.8 Checking RF Signal DRX path(LTE B8)

Circuit Diagram

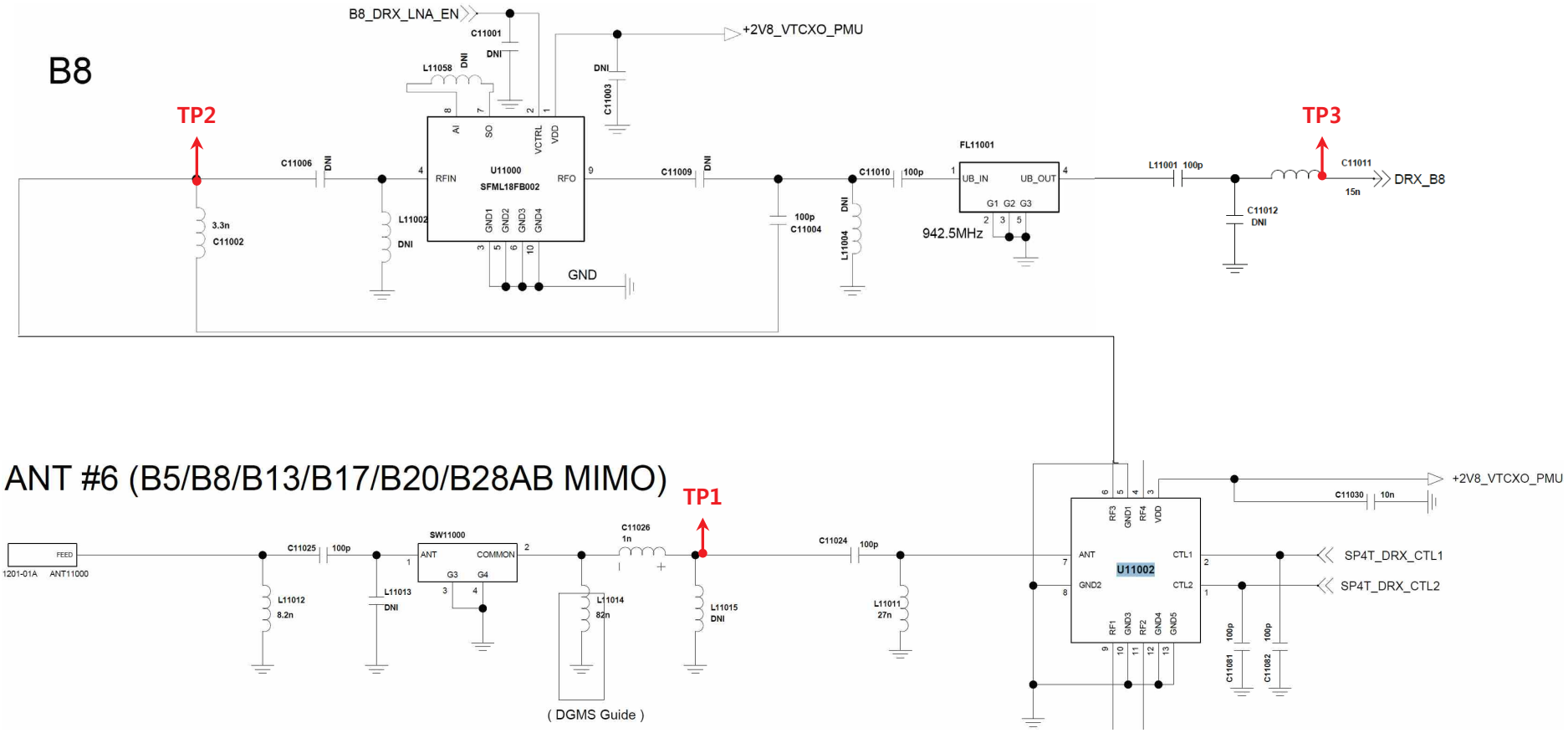

Copyright © 2017 LG Electronics. Inc. All right reserved. Only training and service purposes

3.7 LTE RF PART
3.7.8 Checking RF Signal DRX path(LTE B20)

Checking Flow

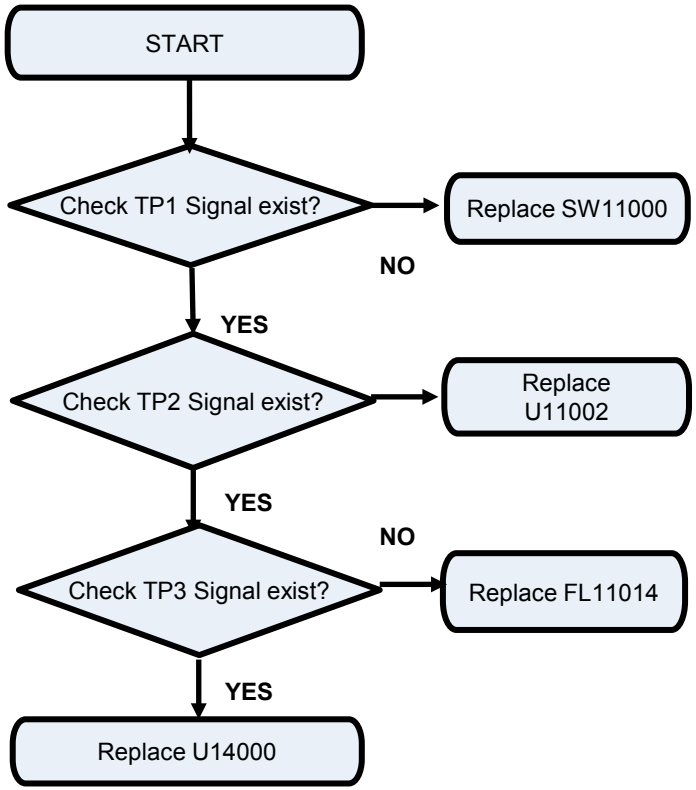

Image

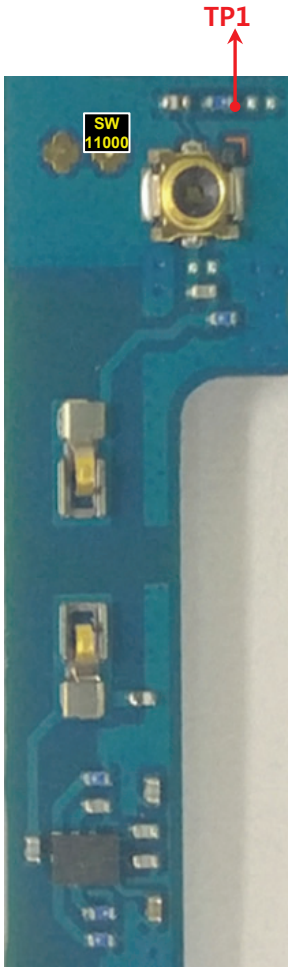

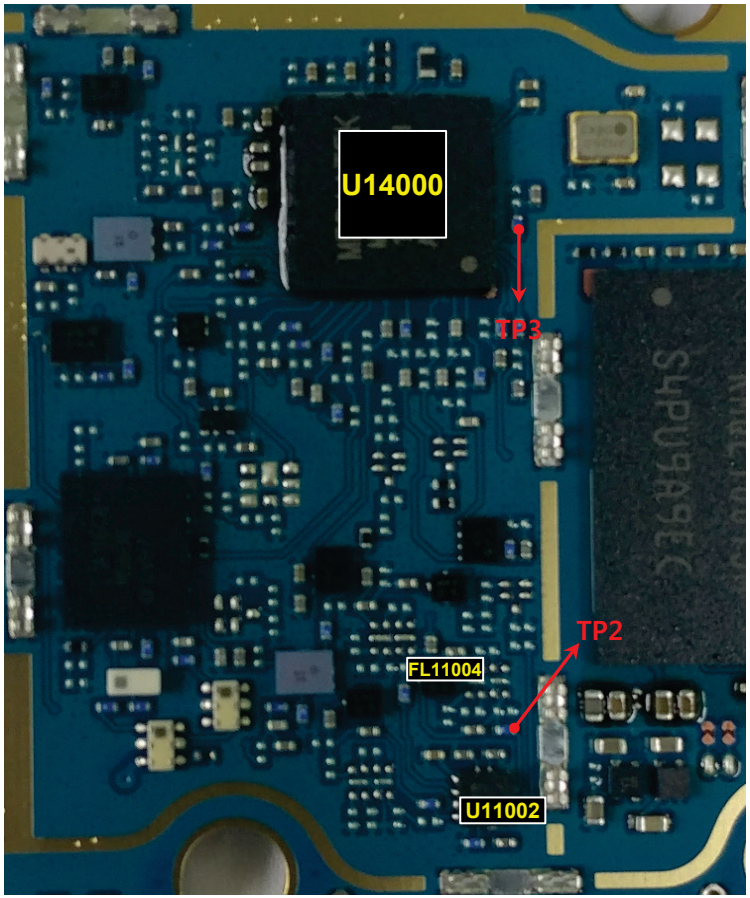

Copyright © 2017 LG Electronics. Inc. All right reserved. Only training and service purposes

3.7 LTE RF PART
3.7.8 Checking RF Signal DRX path(LTE B20)

Circuit Diagram

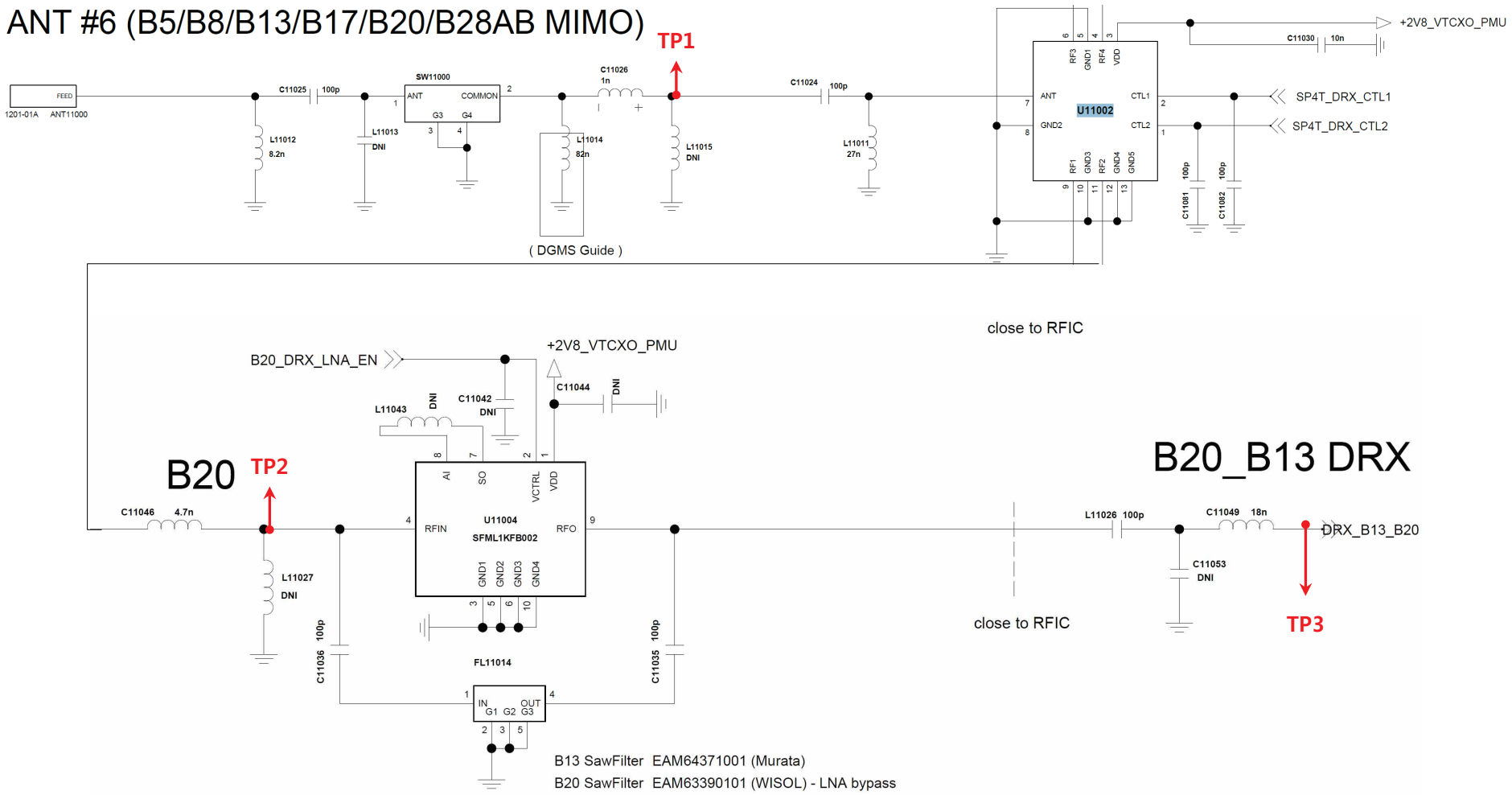

Copyright © 2017 LG Electronics. Inc. All right reserved. Only training and service purposes

3.7 LTE RF PART
3.7.12 Checking RF Signal TX path(LTE B1)

Checking Flow

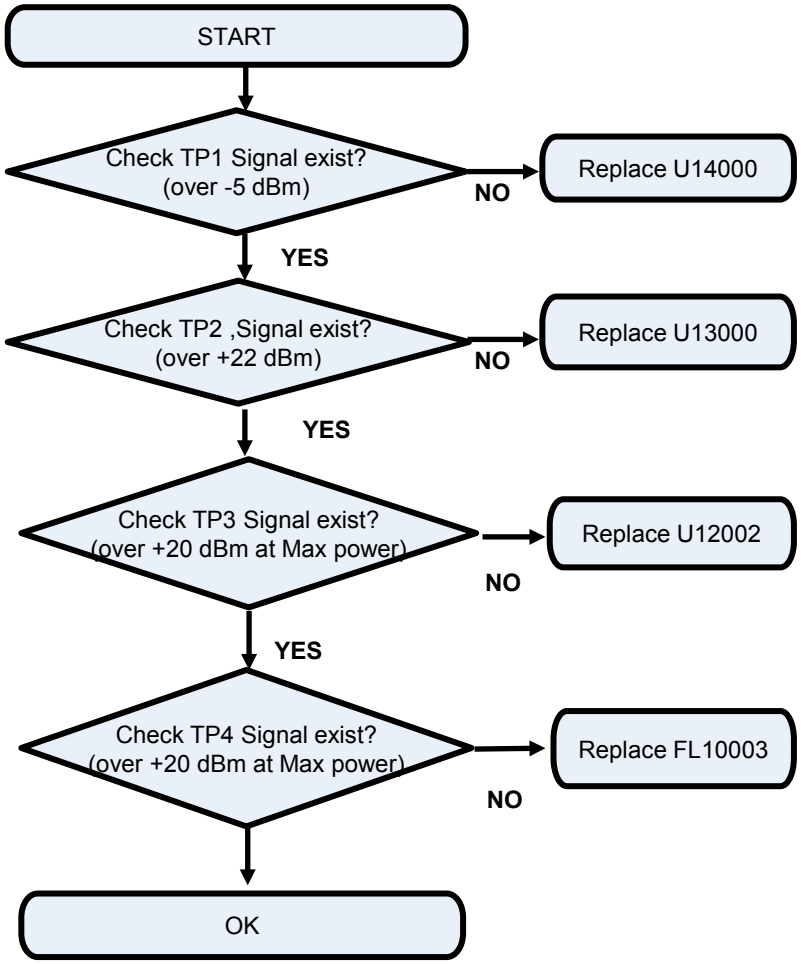

Image

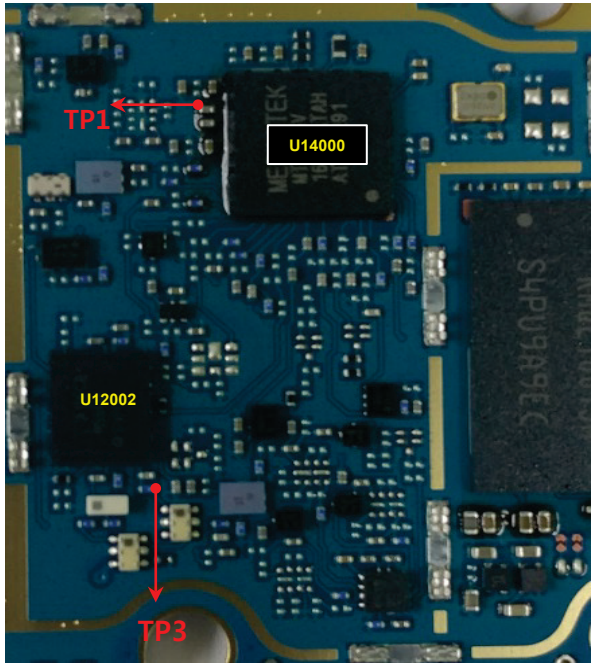

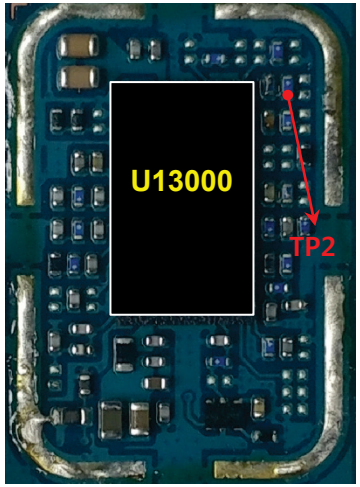

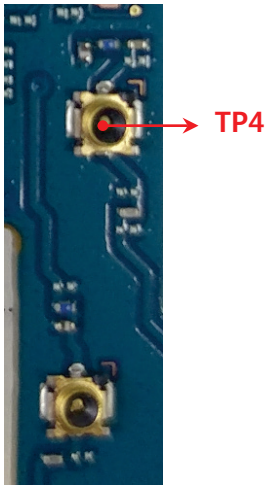

Copyright © 2017 LG Electronics. Inc. All right reserved. Only training and service purposes

3.7 LTE RF PART
3.7.12 Checking RF Signal TX path(LTE B1)

Circuit Diagram

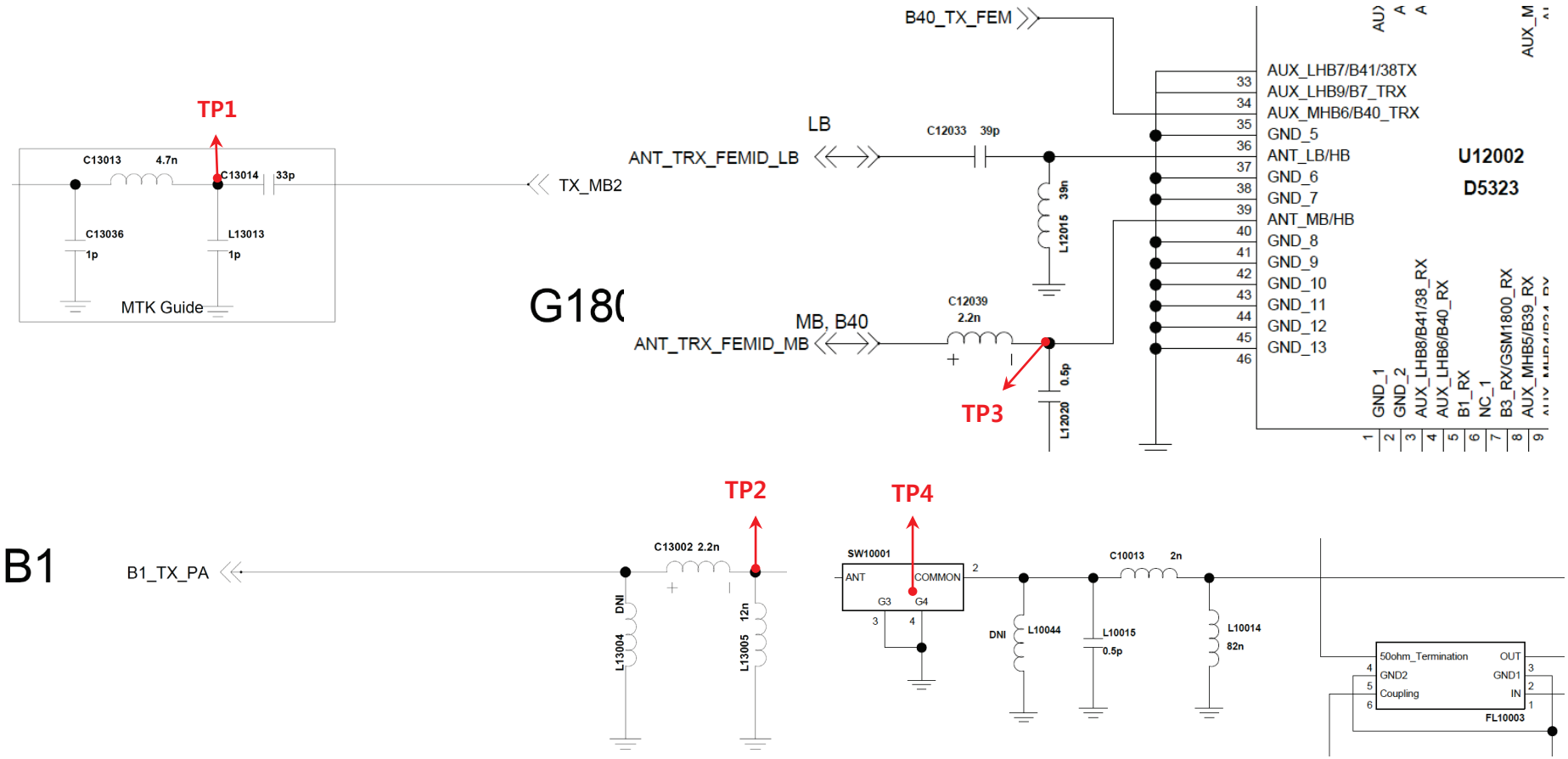

Copyright © 2017 LG Electronics. Inc. All right reserved. Only training and service purposes

3.7 LTE RF PART
3.7.12 Checking RF Signal TX path(LTE B3)

Checking Flow

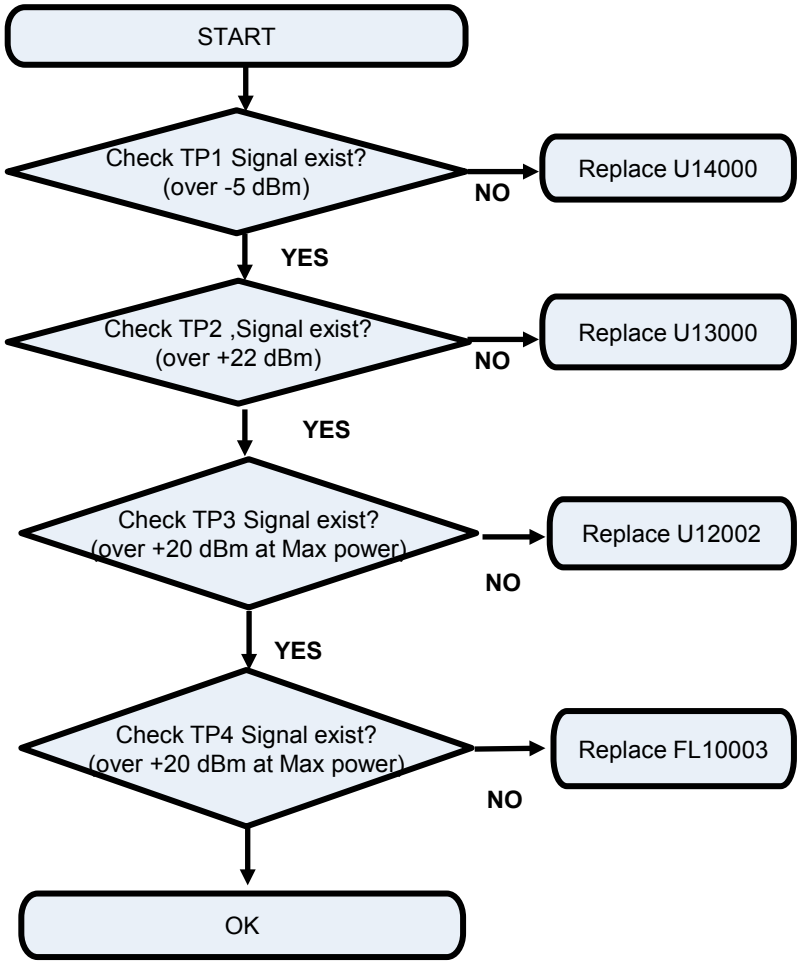

Image

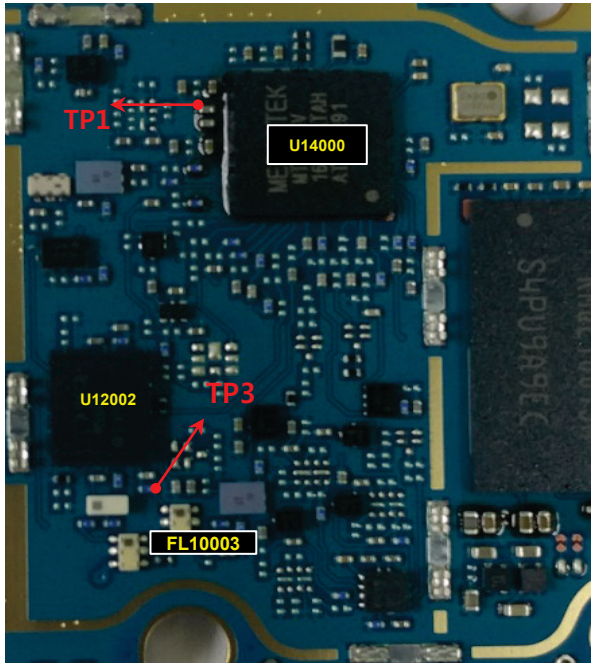

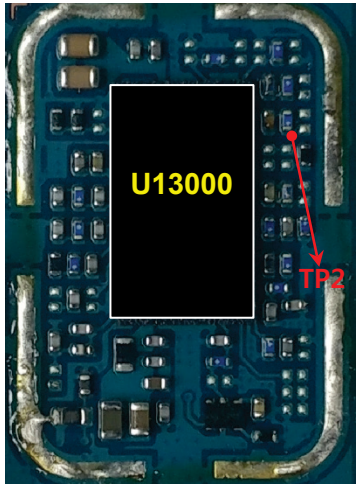

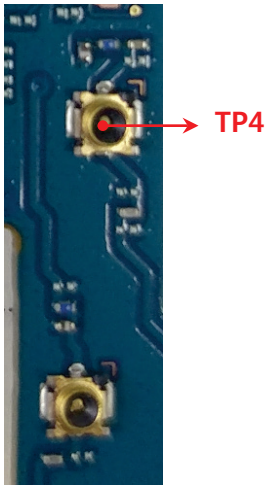

Copyright © 2017 LG Electronics. Inc. All right reserved. Only training and service purposes

3.7 LTE RF PART
3.7.12 Checking RF Signal TX path(LTE B3)

Circuit Diagram

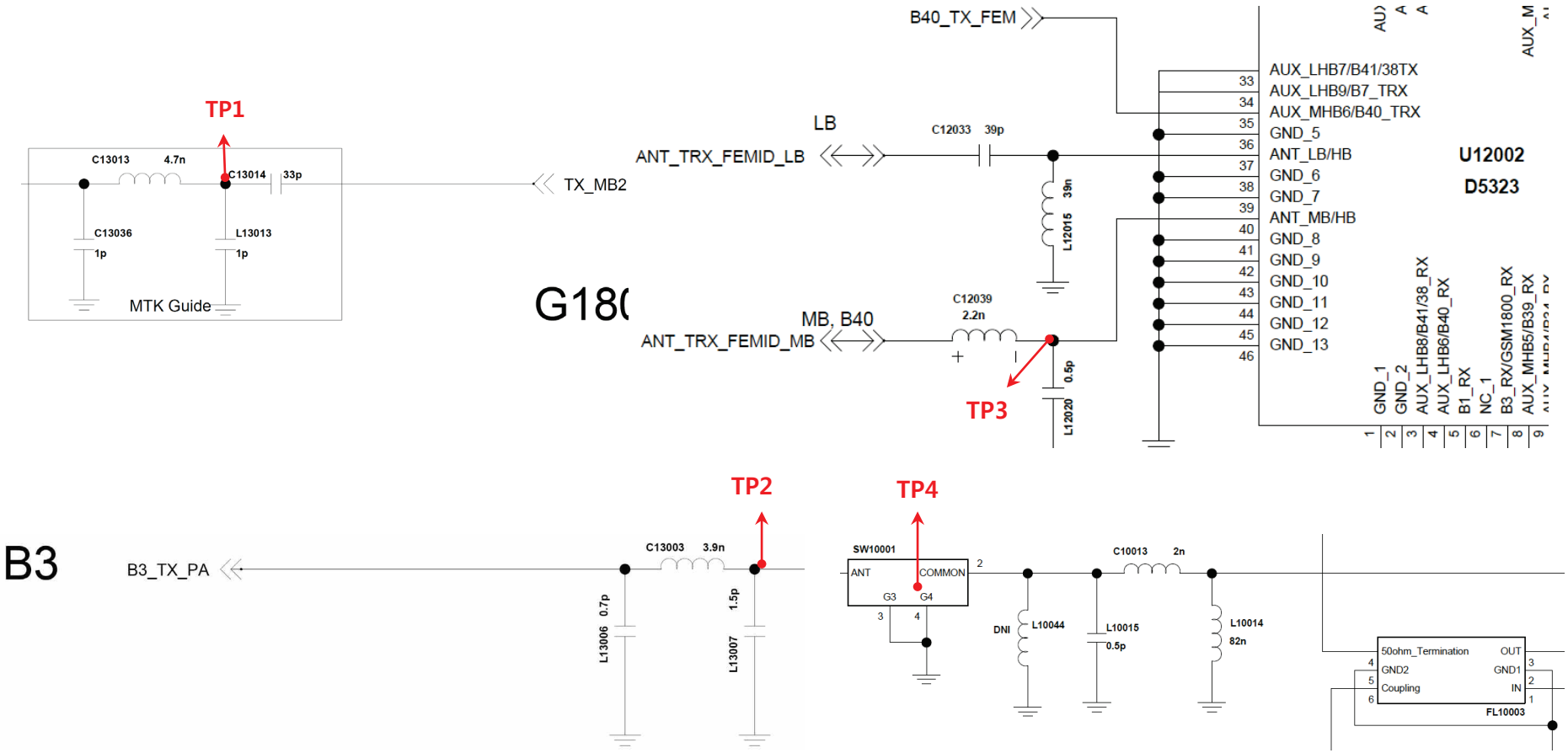

Copyright © 2017 LG Electronics. Inc. All right reserved. Only training and service purposes

3.7 LTE RF PART

3.7.12 Checking RF Signal TX path(LTE B7)

Checking Flow

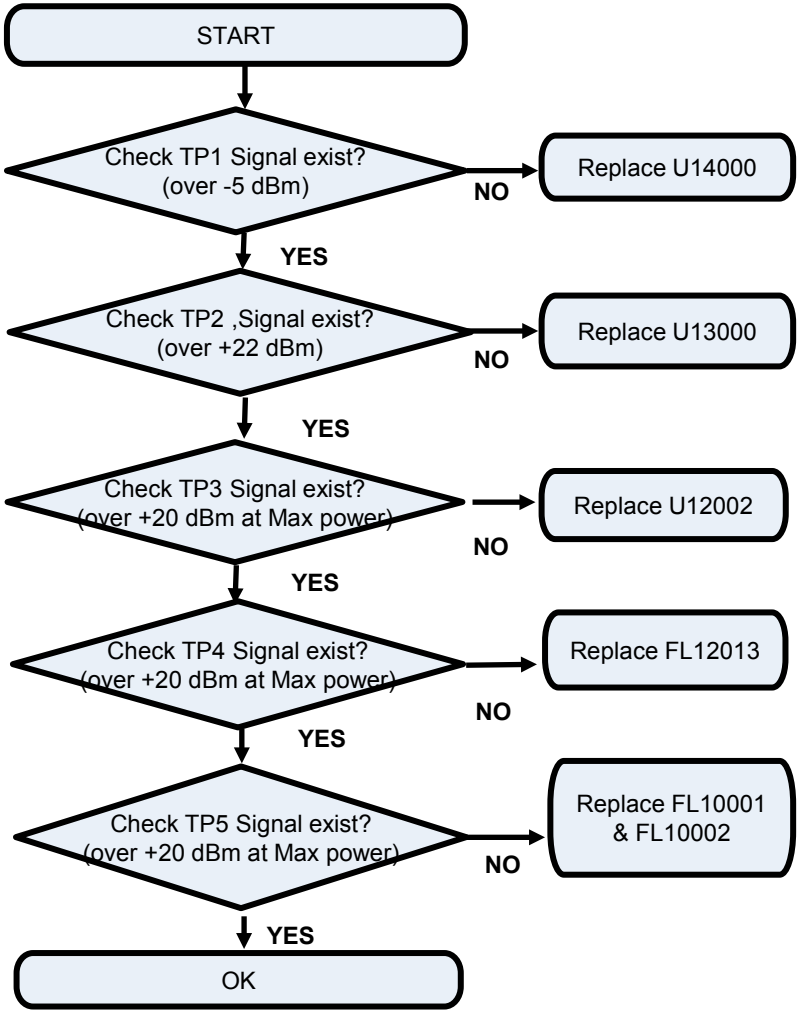

Image

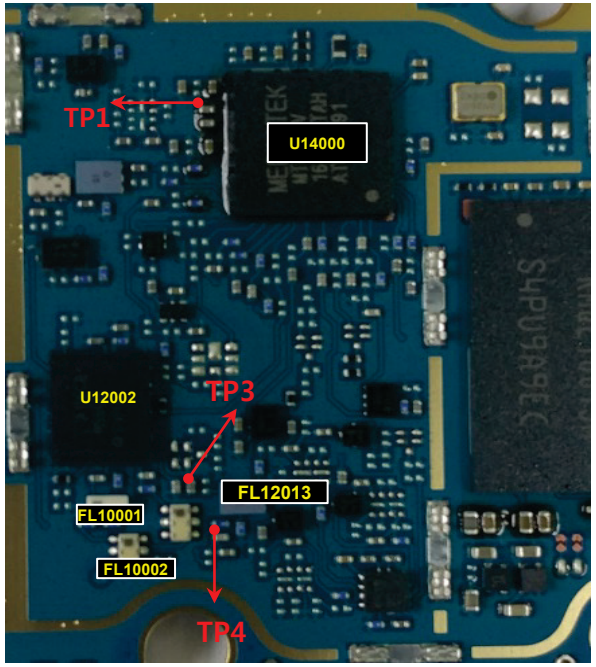

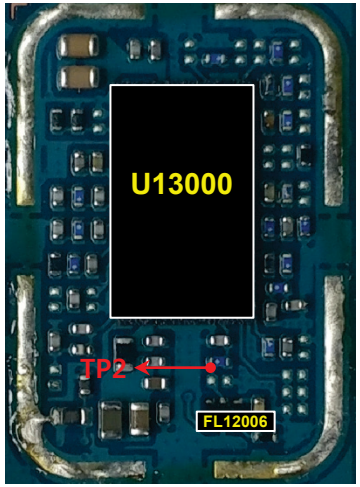

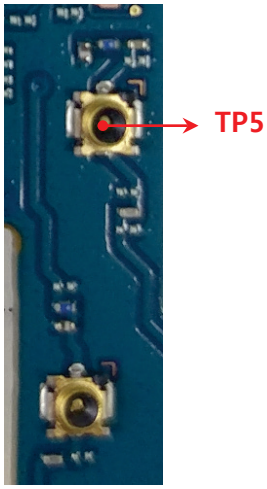

Copyright © 2017 LG Electronics. Inc. All right reserved. Only training and service purposes

3.7 LTE RF PART
3.7.12 Checking RF Signal TX path(LTE B7)

Circuit Diagram

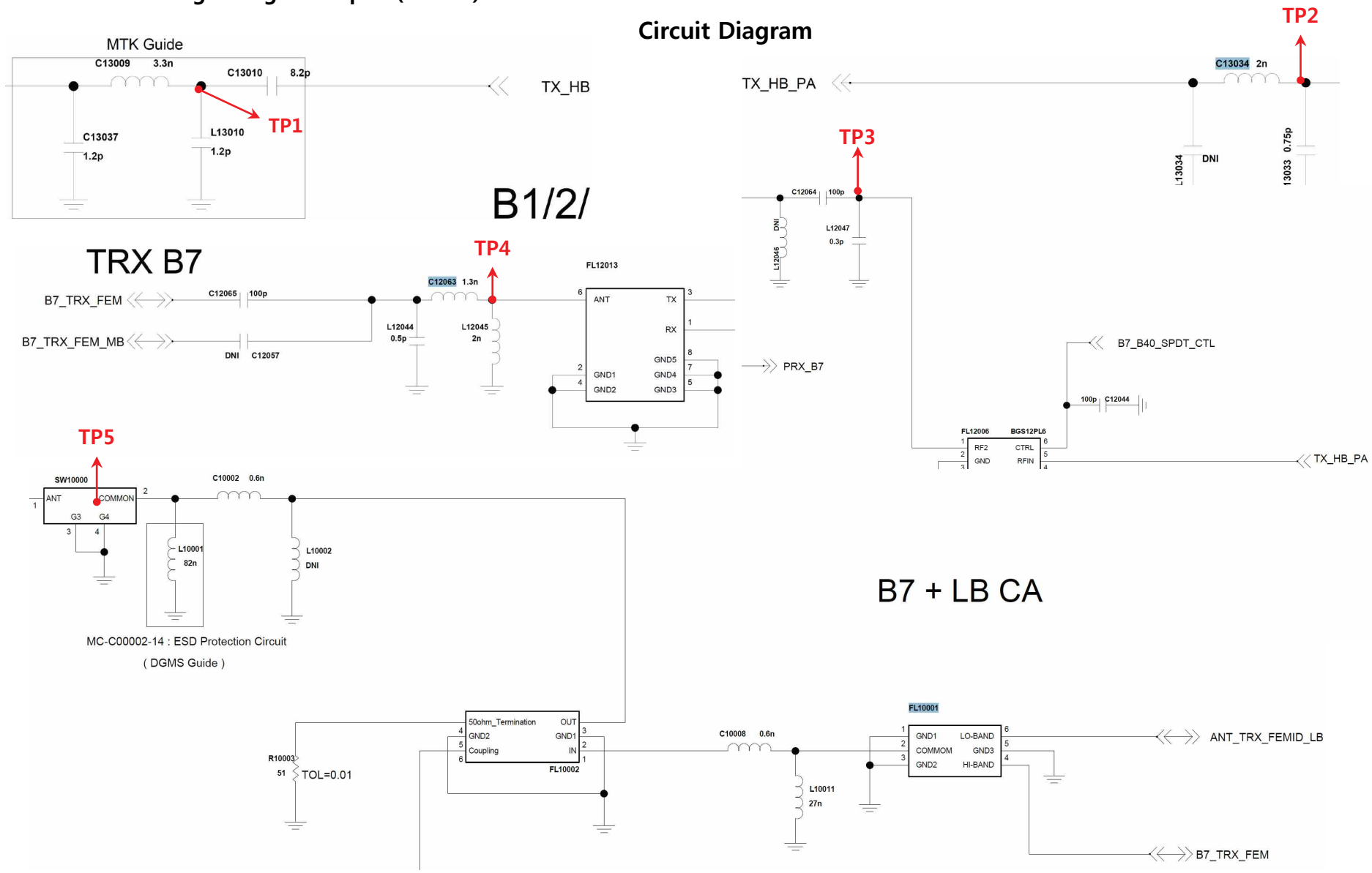

Copyright © 2017 LG Electronics. Inc. All right reserved. Only training and service purposes

3.7 LTE RF PART
3.7.12 Checking RF Signal TX path(LTE B8)

Checking Flow

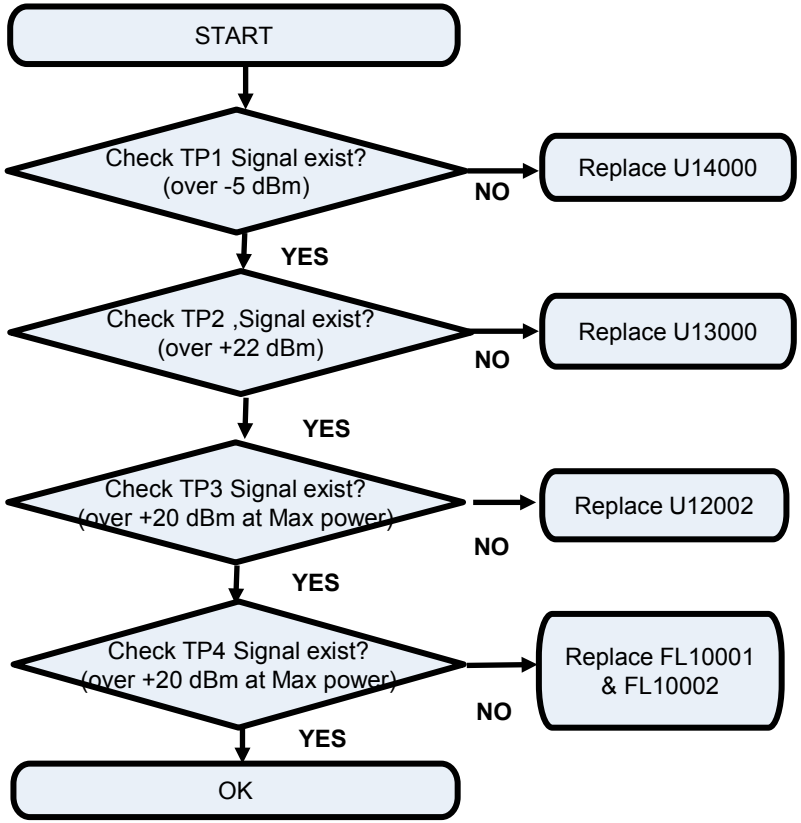

Image

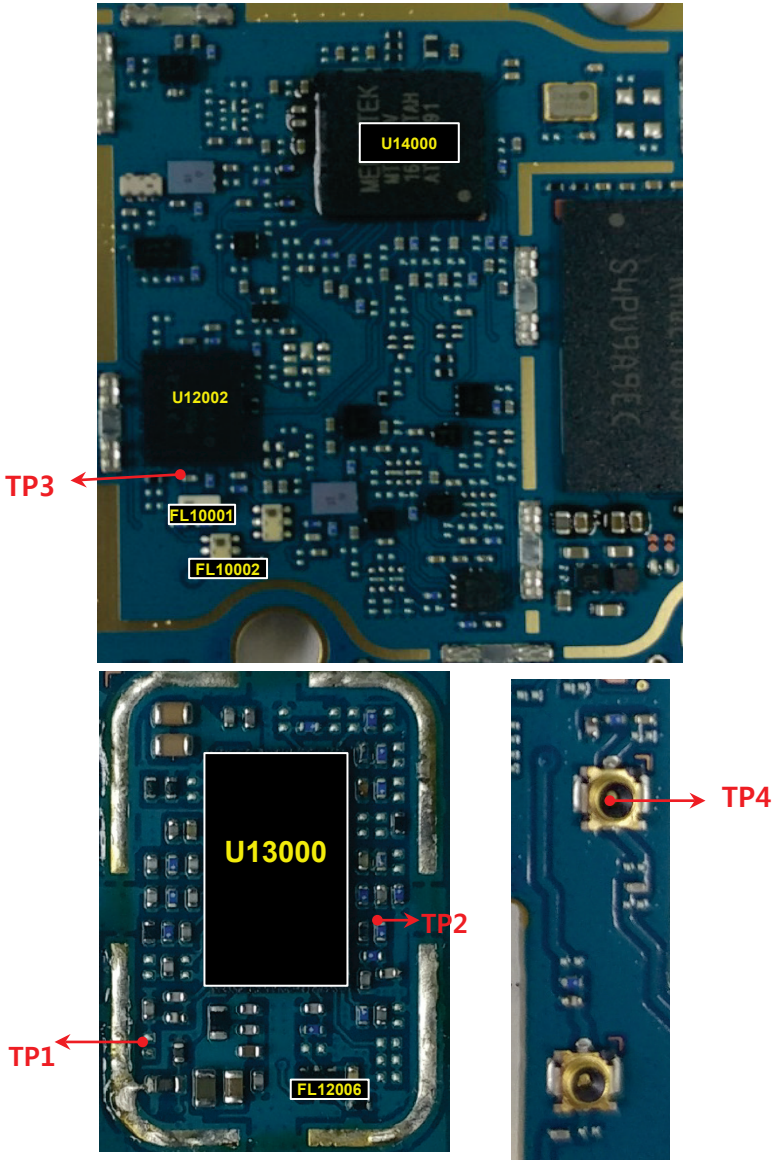

Copyright © 2017 LG Electronics. Inc. All right reserved. Only training and service purposes

3.7 LTE RF PART
3.7.12 Checking RF Signal TX path(LTE B8)

Circuit Diagram

B5/B8/B17/B20/B28

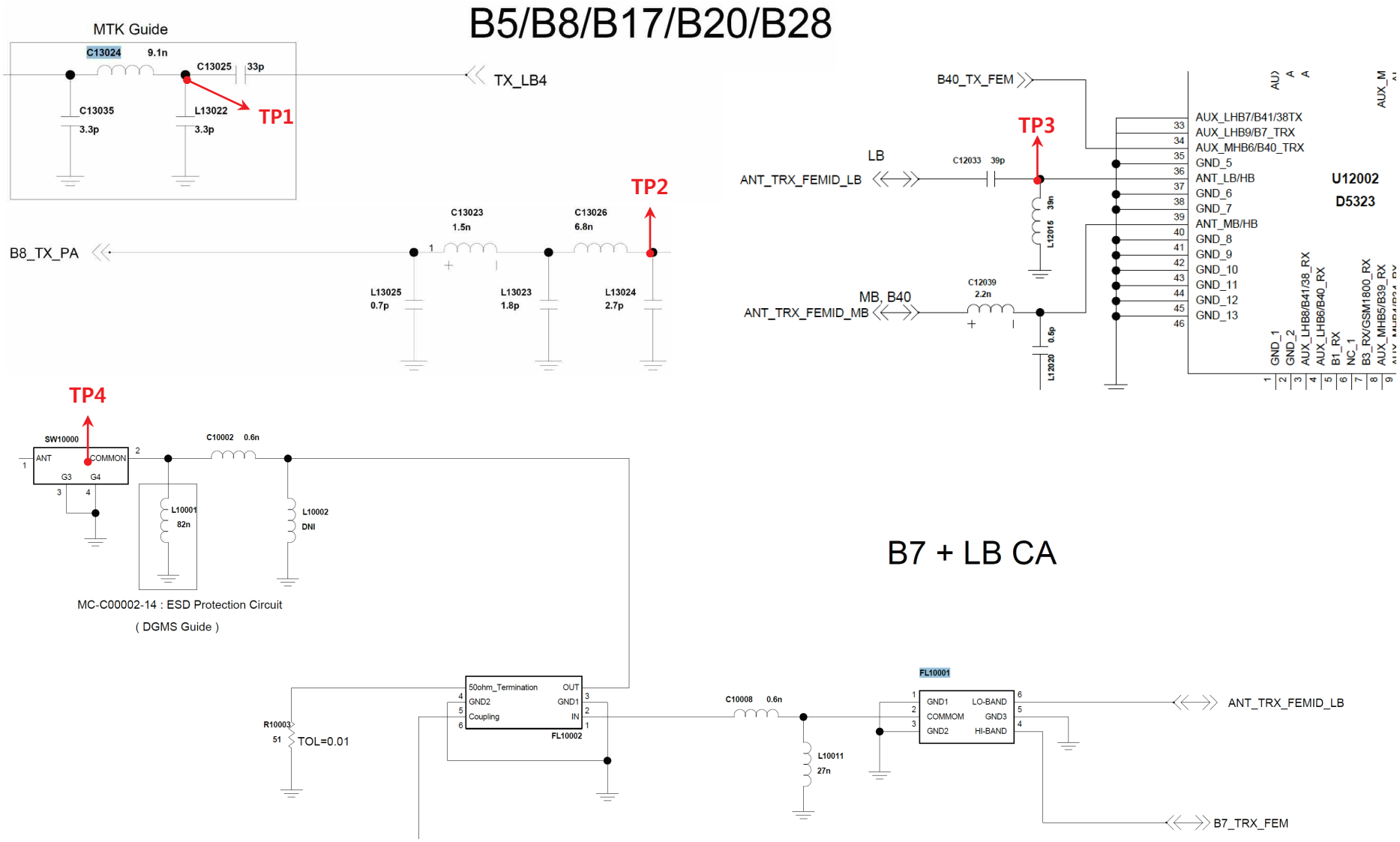

Copyright © 2017 LG Electronics. Inc. All right reserved. Only training and service purposes

3.7 LTE RF PART

3.7.12 Checking RF Signal TX path(LTE B20)

Checking Flow

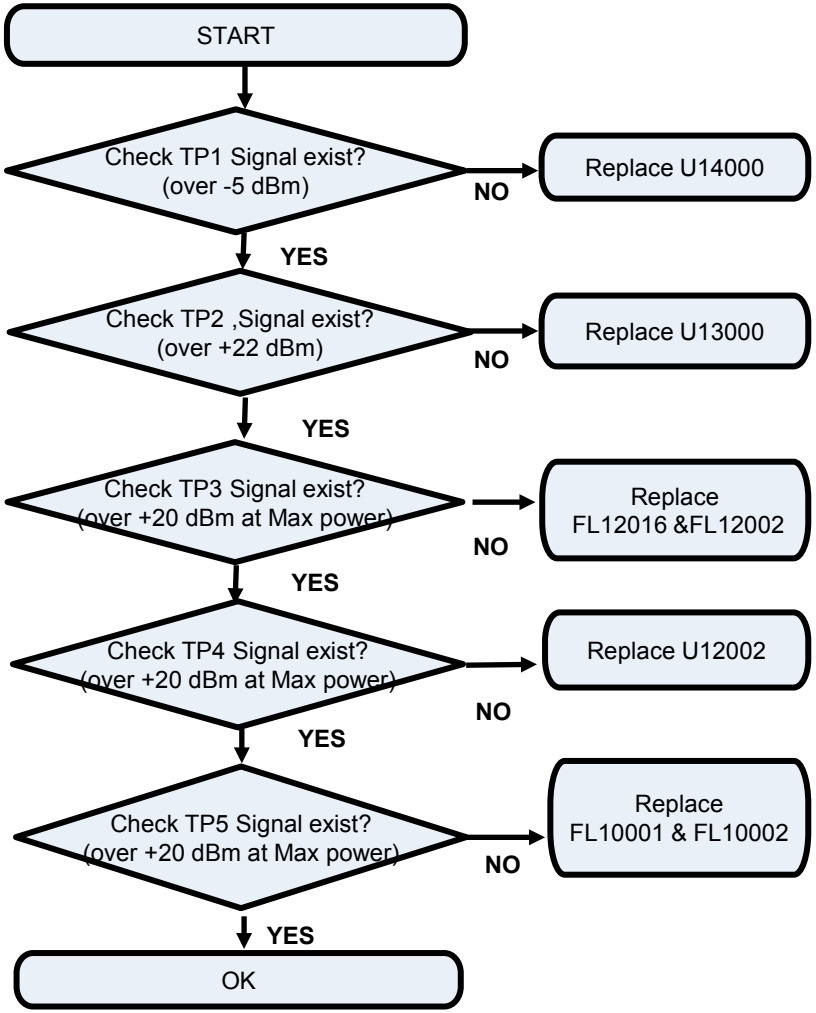

Image

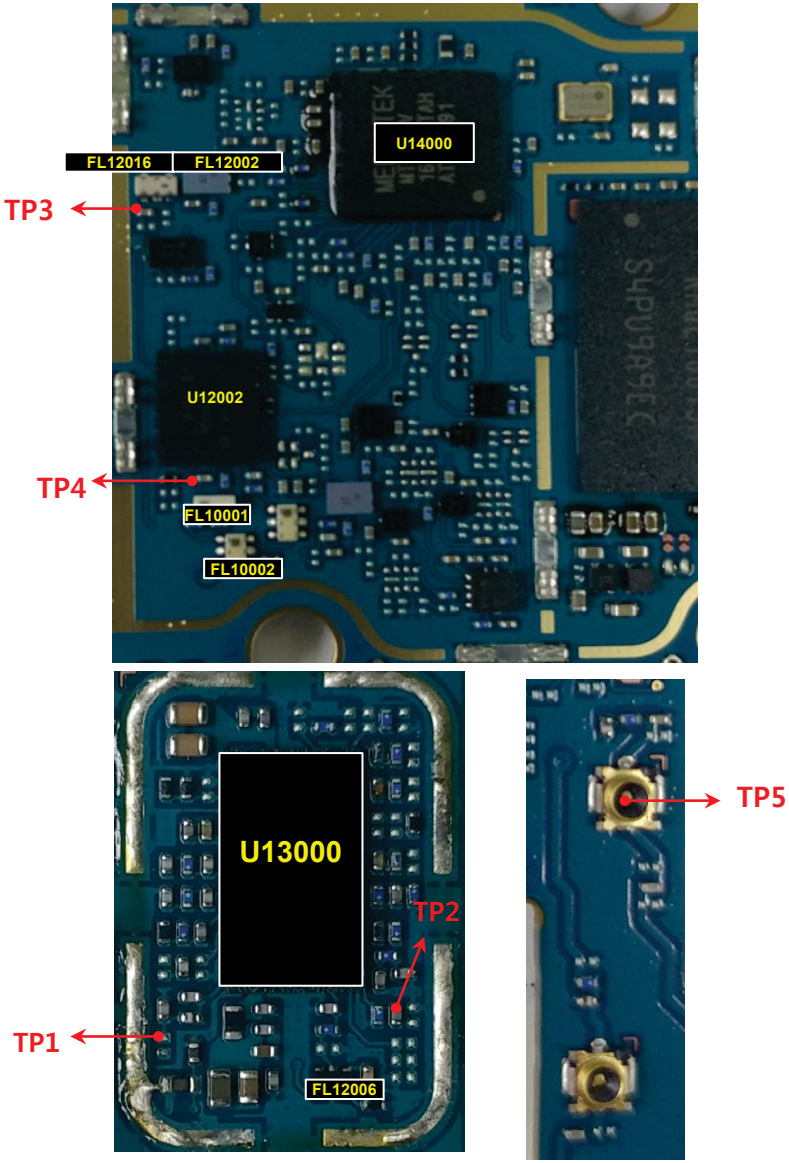

Copyright © 2017 LG Electronics. Inc. All right reserved. Only training and service purposes

3.7 LTE RF PART
3.7.12 Checking RF Signal TX path(LTE B20)

Circuit Diagram

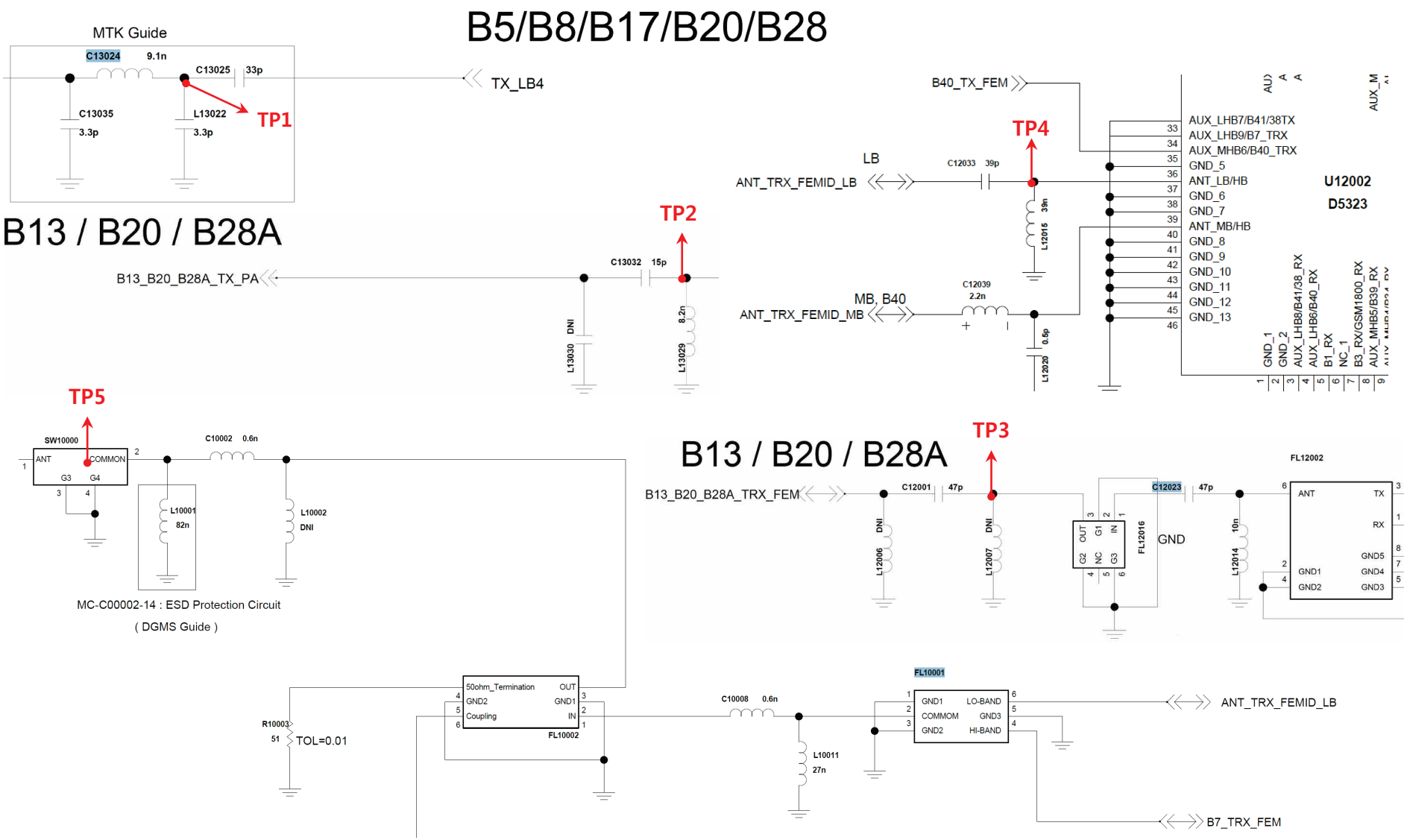

Copyright © 2017 LG Electronics. Inc. All right reserved. Only training and service purposes

3.8 Power

Checking Power signal (Battery connector, Power Key, PMIC Regulator)

Checking Flow

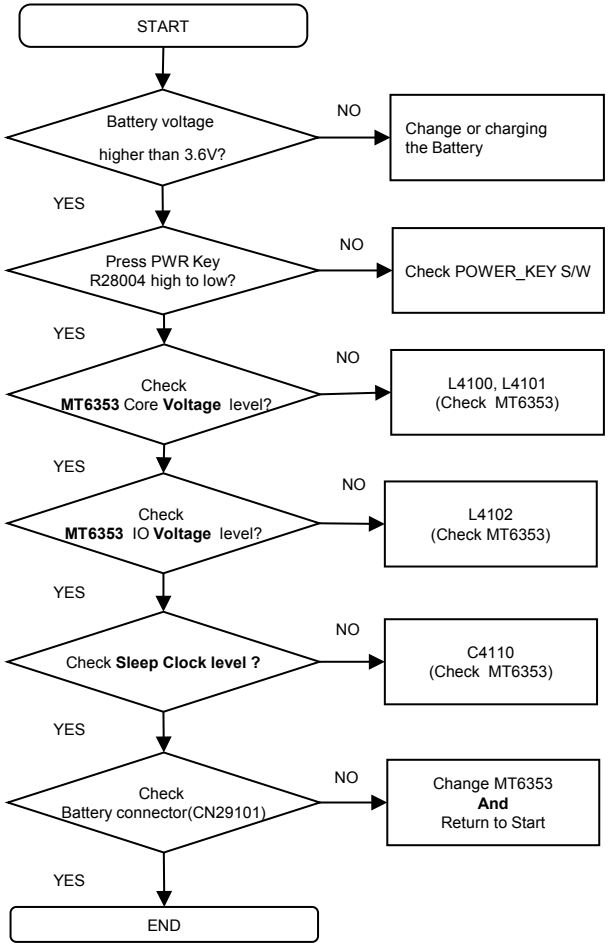

Image

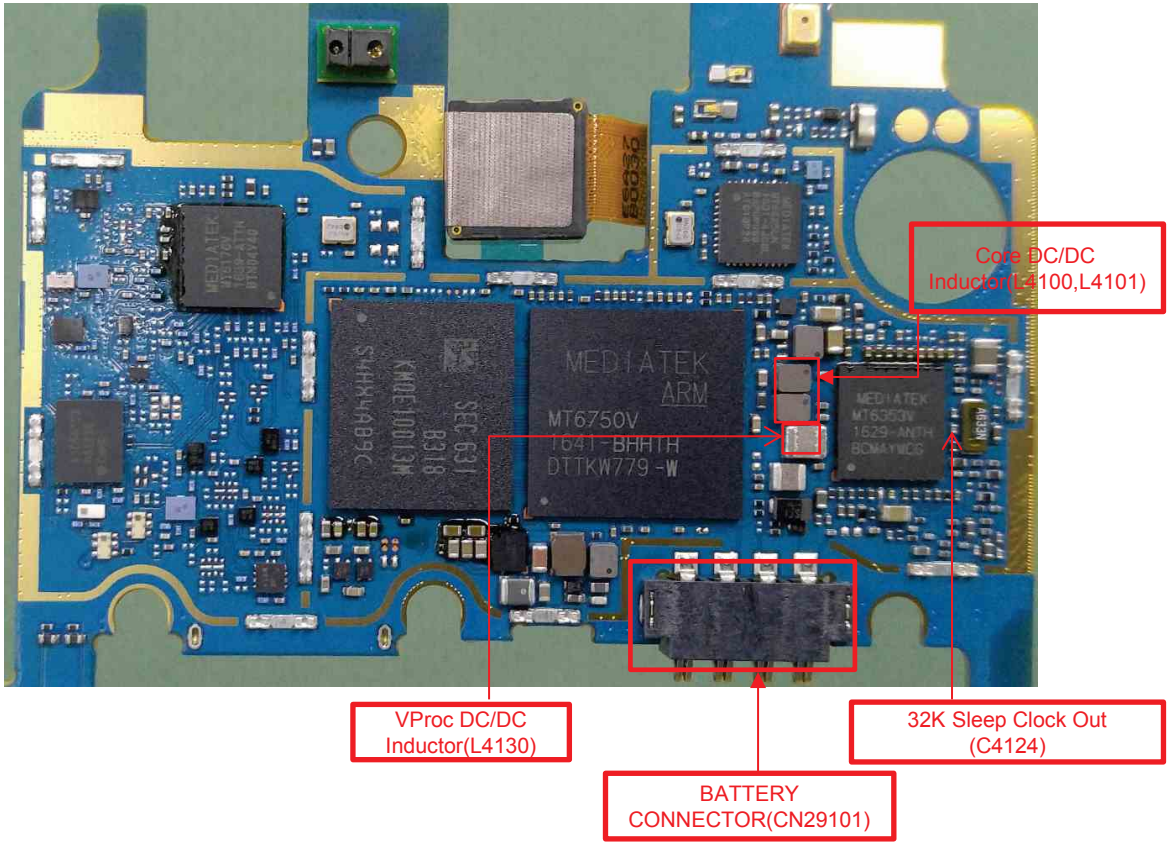

Copyright © 2017 LG Electronics. Inc. All right reserved. Only training and service purposes

3.8 Power

Checking Power signal (Battery connector, Power Key, PMIC Regulator)

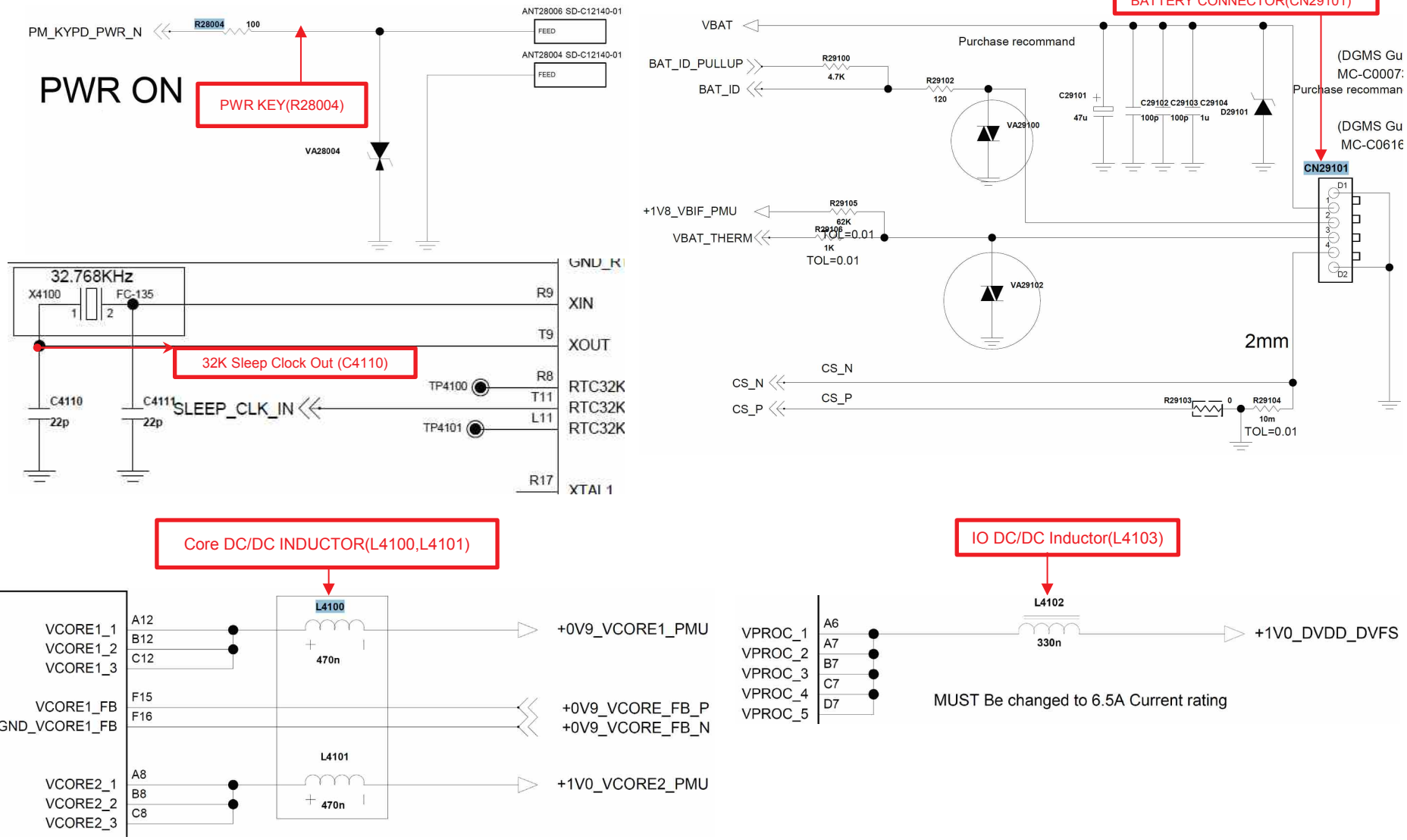

Copyright © 2017 LG Electronics. Inc. All right reserved. Only training and service purposes

3.9 Charger

The I/O connector and uUSB cable voltage(5.0V) is used as the reference one of PMIC for charging.

Checking Flow

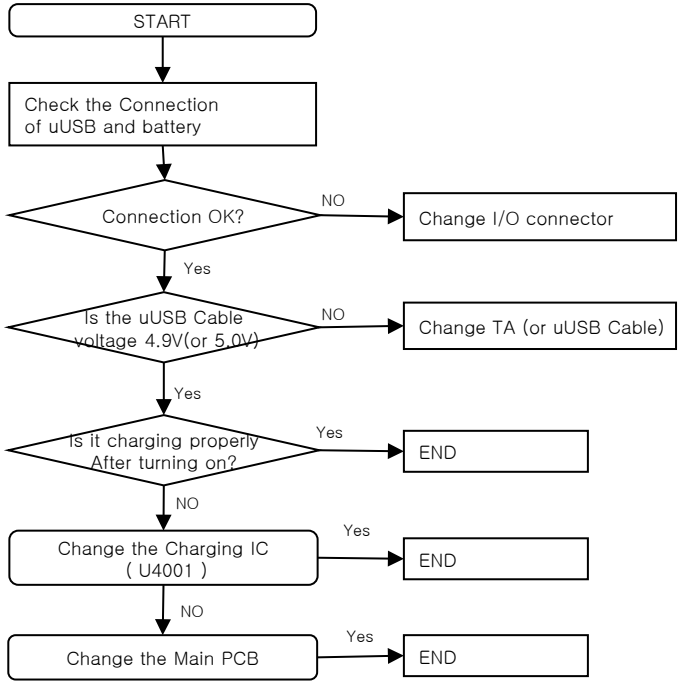

Image

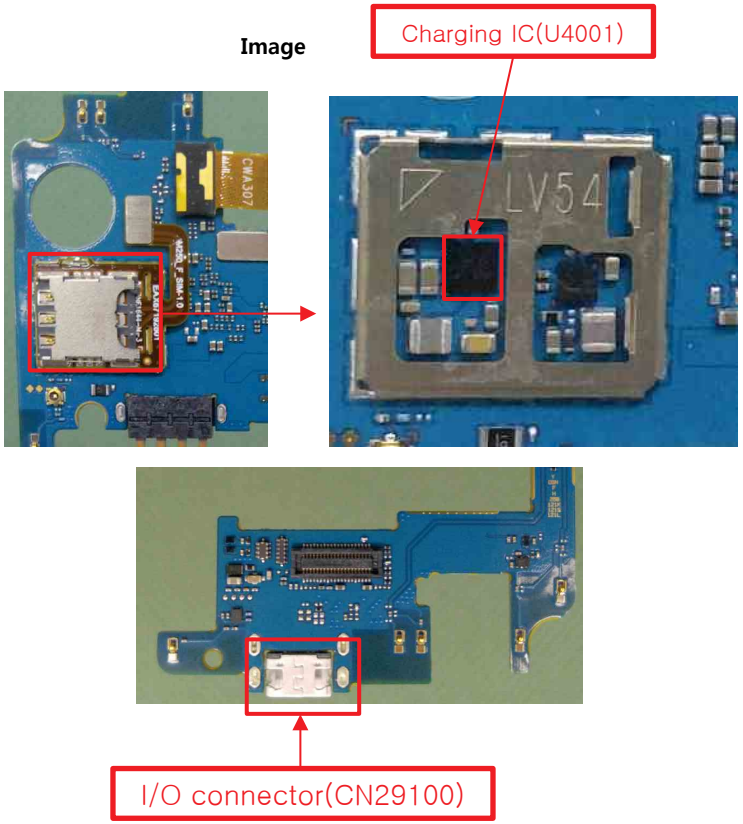

Copyright © 2017 LG Electronics. Inc. All right reserved. Only training and service purposes

3.9 Charger

The I/O connector and uUSB cable voltage(5.0V) is used as the reference one of PMIC for charging.

Checking Flow

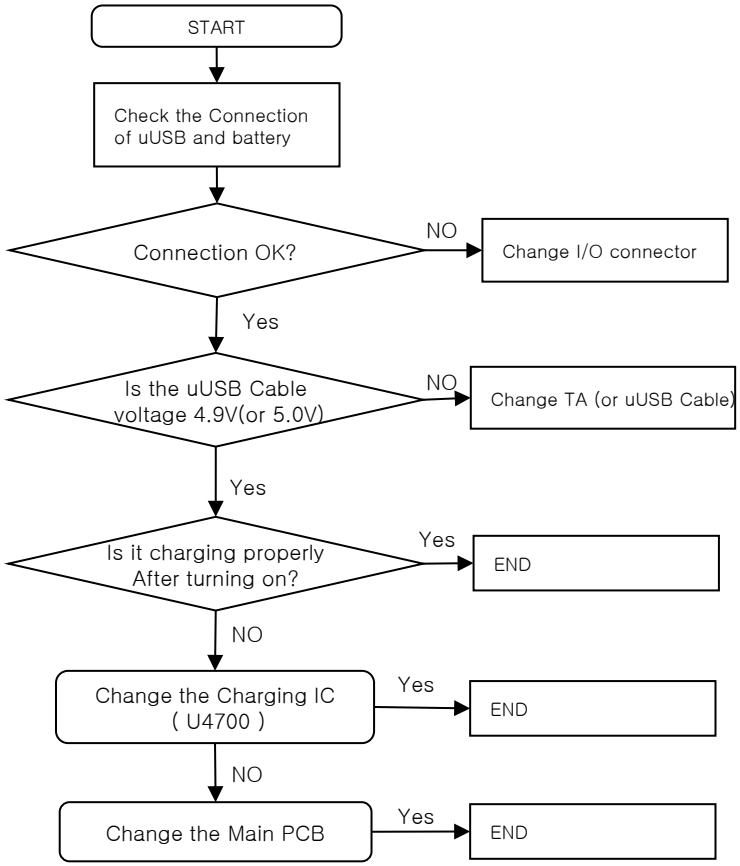

Image

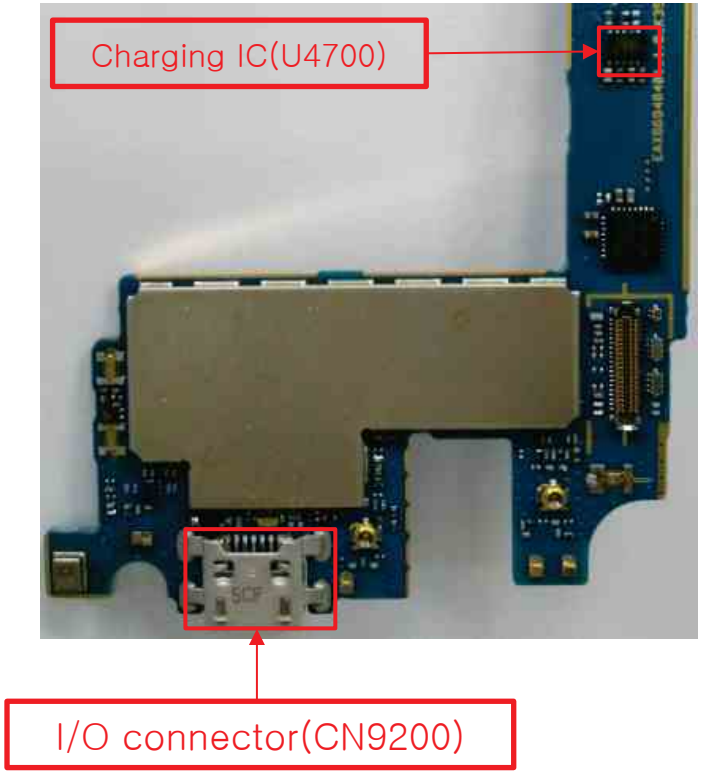

Copyright © 2017 LG Electronics. Inc. All right reserved. Only training and service purposes

3.10 Audio Block(3.10.1 Audio receiver)

The receiver control signals are generated by MT6353(U4100), the MT6353 chip and the receiver are to be checked out.

Checking Flow

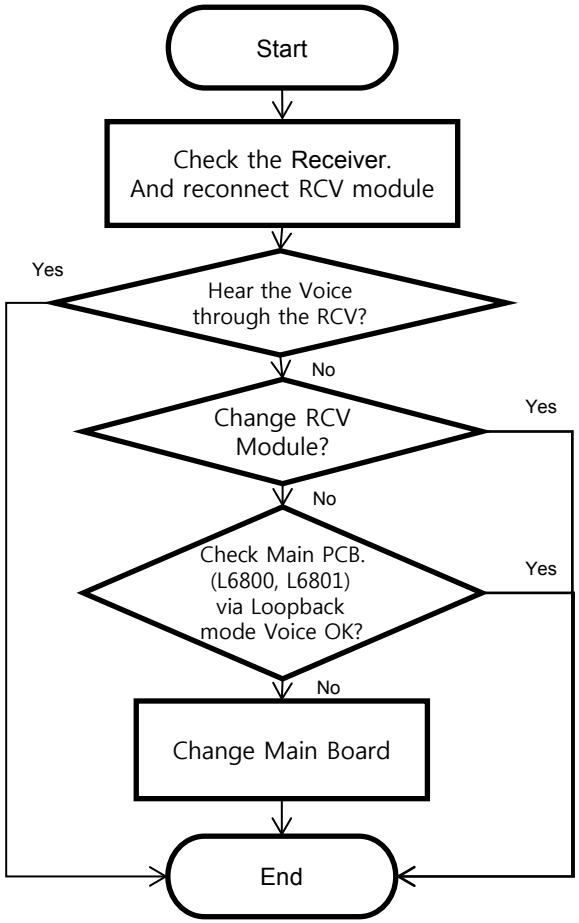

Image

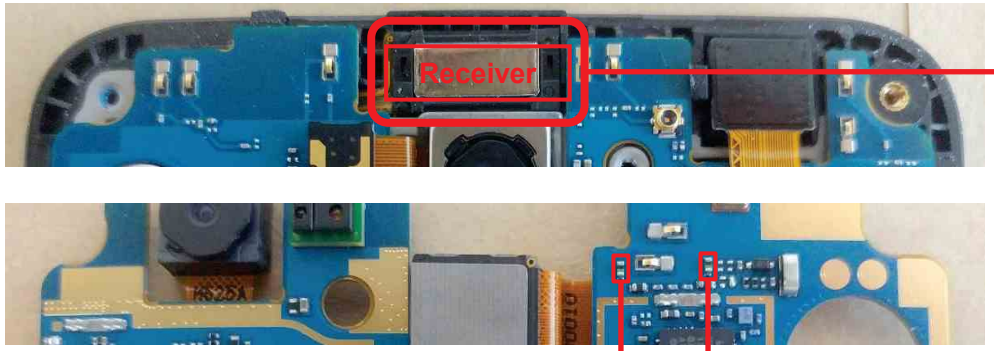

Circuit Diagram

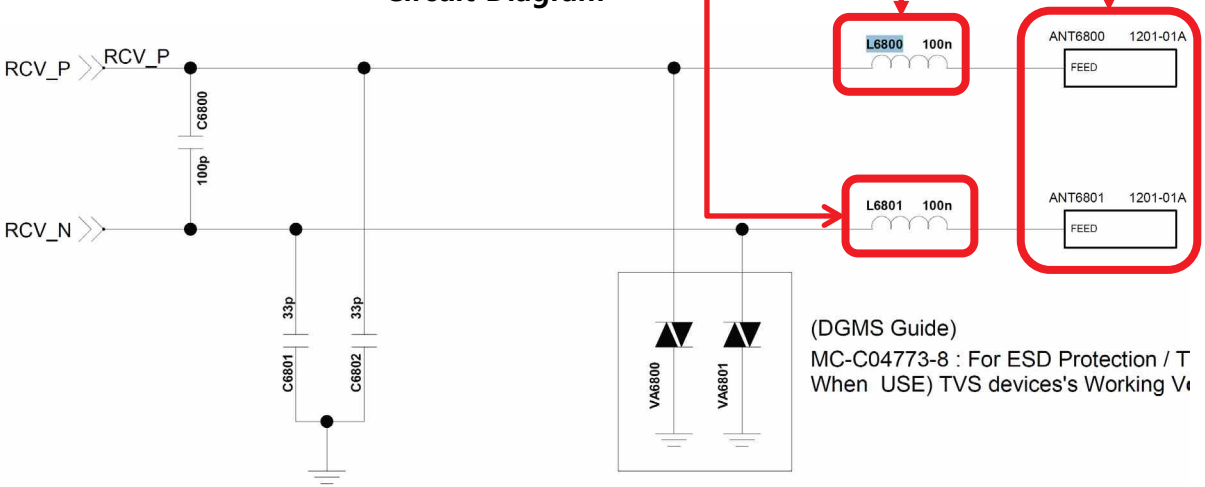

Copyright © 2017 LG Electronics. Inc. All right reserved. Only training and service purposes

3.10.1 Audio_speaker

The Speaker control signals are generated by MT6353(U4100), the MT6353 chip and the speaker are to be checked out.

Checking Flow

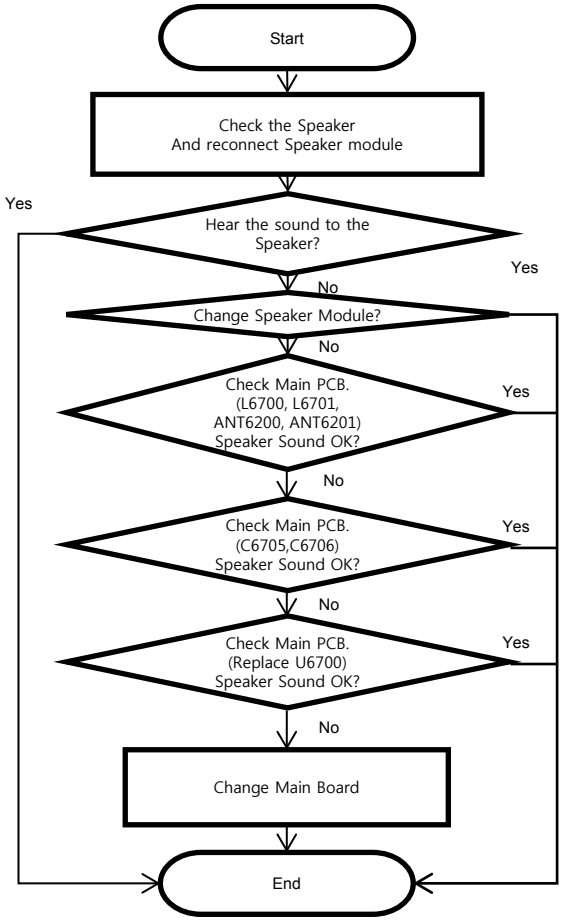

Image

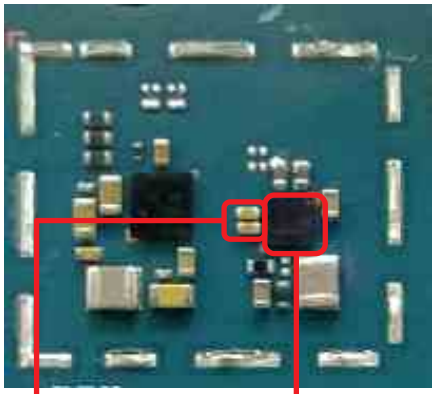

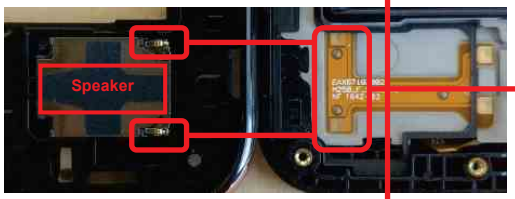

Circuit Diagram

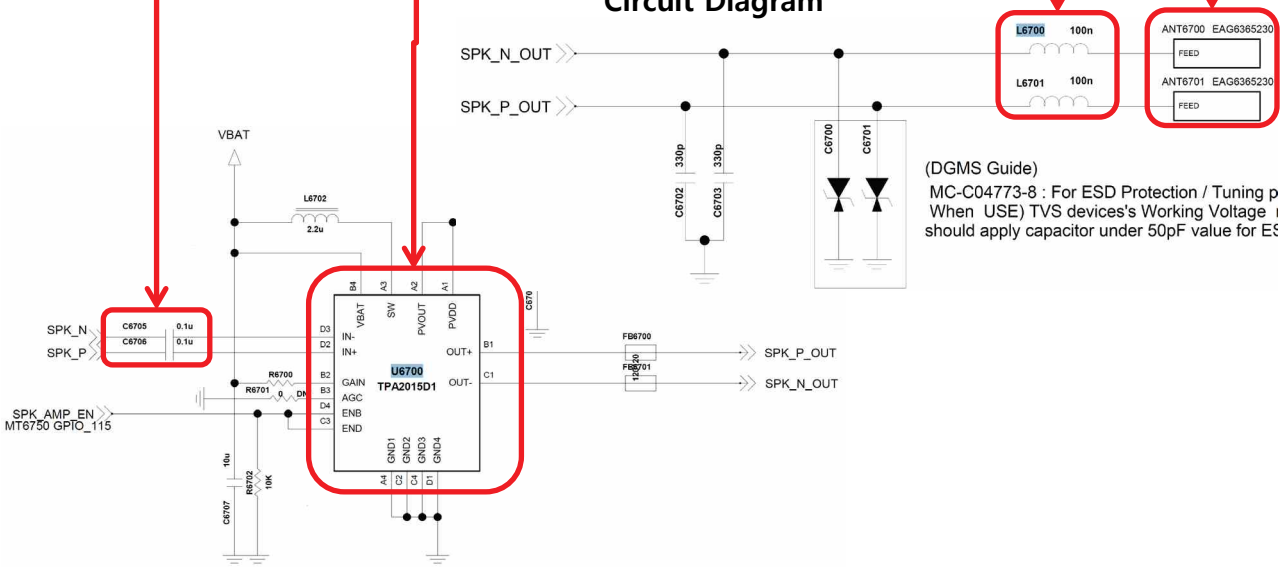

Copyright © 2017 LG Electronics. Inc. All right reserved. Only training and service purposes

3.10.2 Audio_Main MIC

It's operating voice call(except speakerphone), voice recording, camcorder recording.

Checking Flow

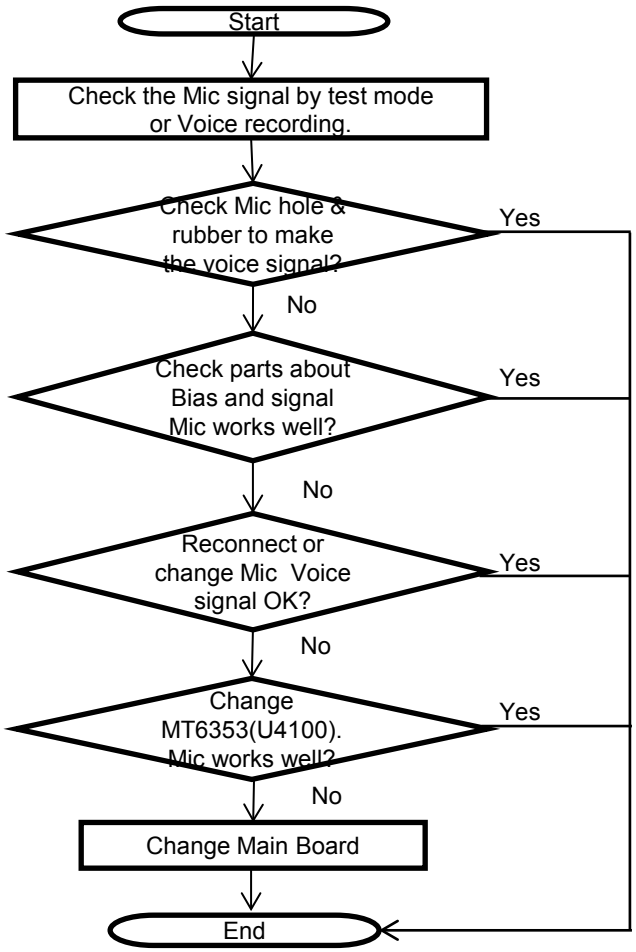

Image

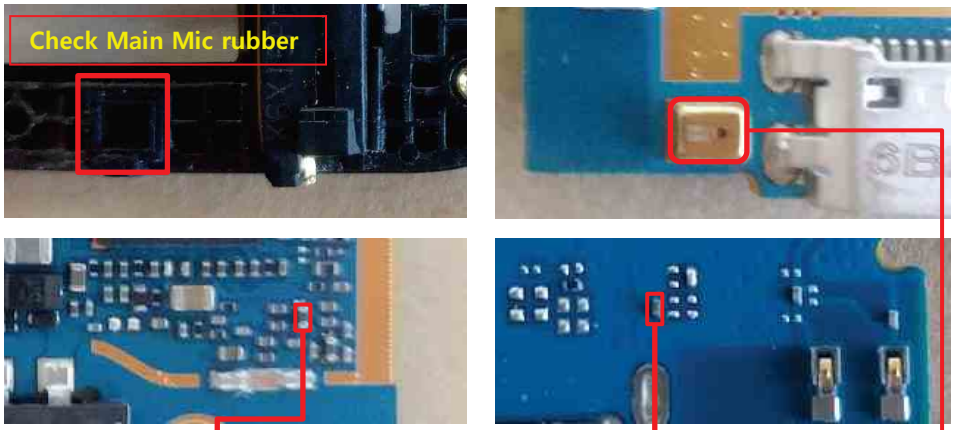

Circuit Diagram

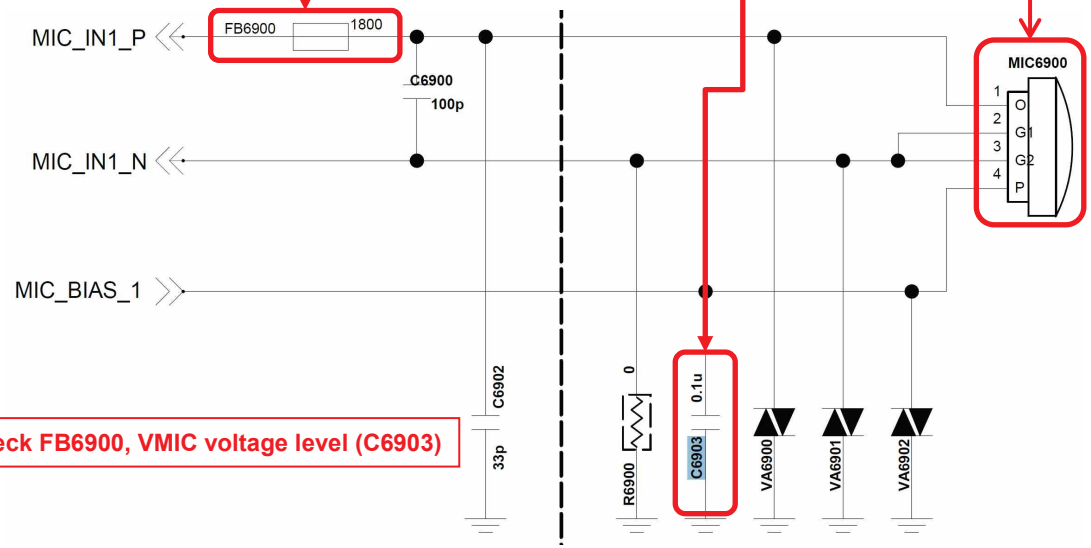

Check FB6900, VMIC voltage level (C6903)

Copyright © 2017 LG Electronics. Inc. All right reserved. Only training and service purposes

3.10.3 Audio_sub MIC

It's operating Speakerphone call.

Checking Flow

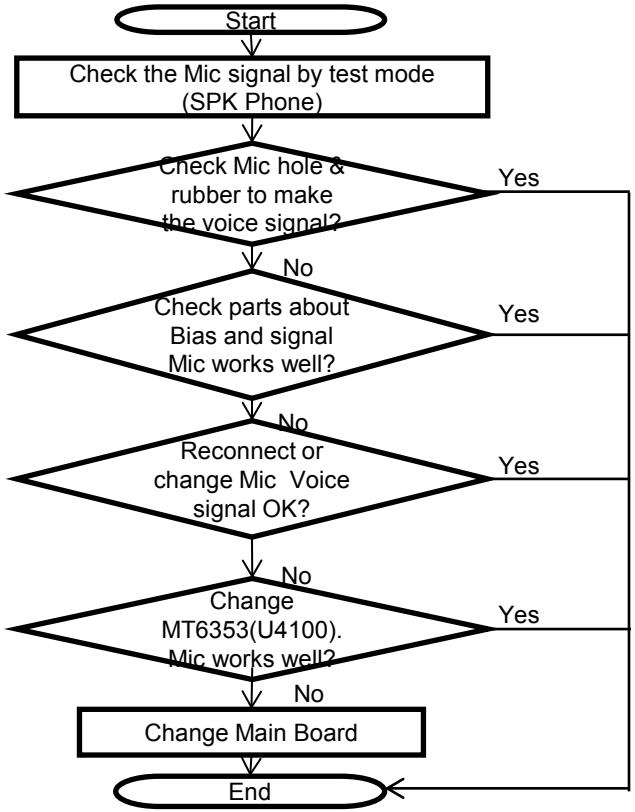

Image

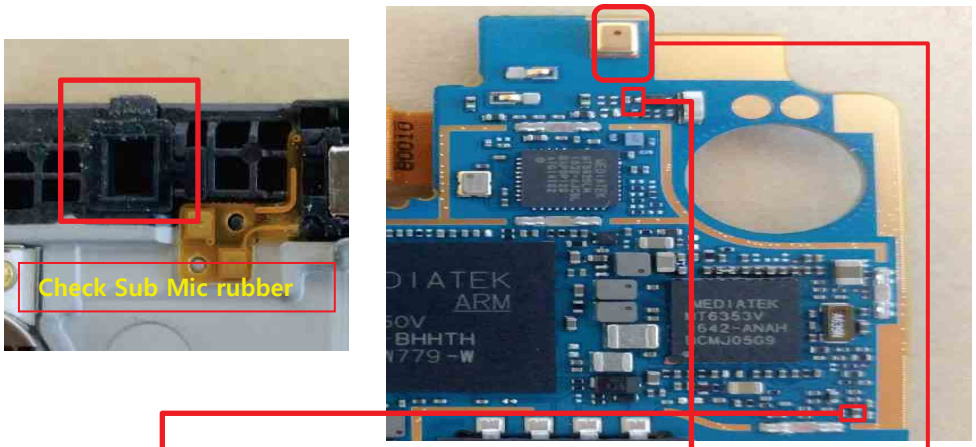

Circuit Diagram

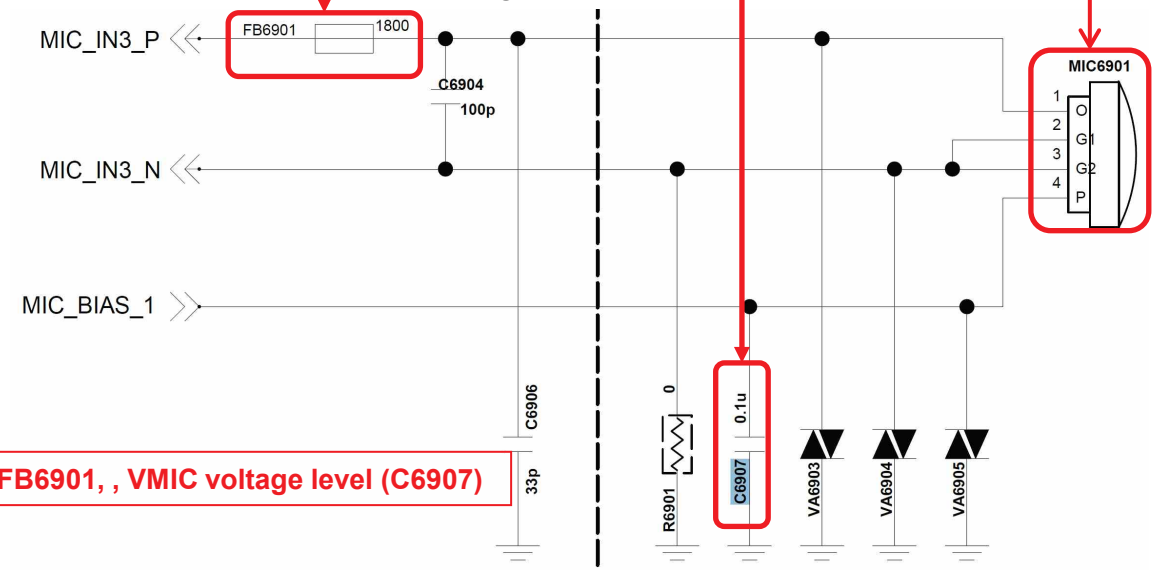

Check FB6901, , VMIC voltage level (C6907)

Copyright © 2017 LG Electronics. Inc. All right reserved. Only training and service purposes

3.10.4 Audio_Ear MIC Jack

Disable detecting headset insert or No sound from Earphone, Check the Ear Mic and MT6353

Checking Flow

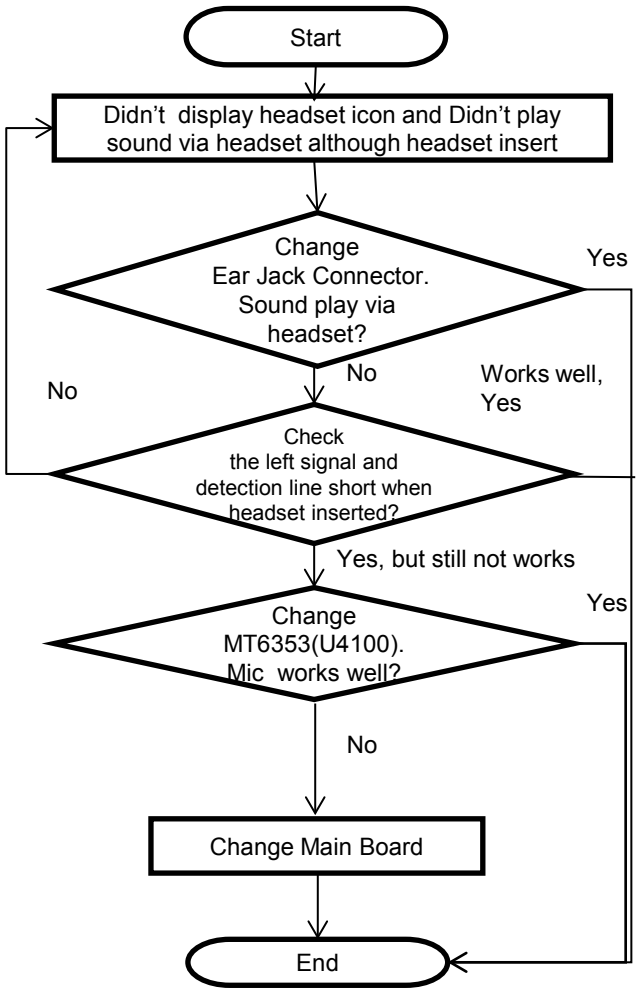

Image

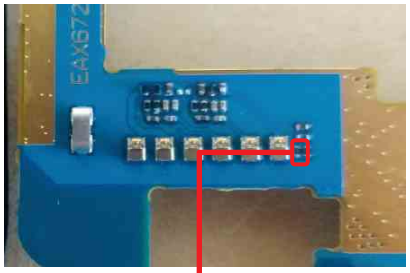

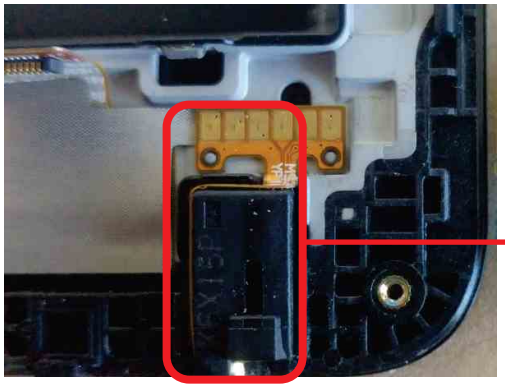

Jack detect
Voltage Level Check at R6607
- 1.8V(before Jack)
- low(after Jack)

Circuit Diagram

< 6-6-1_Earjack >

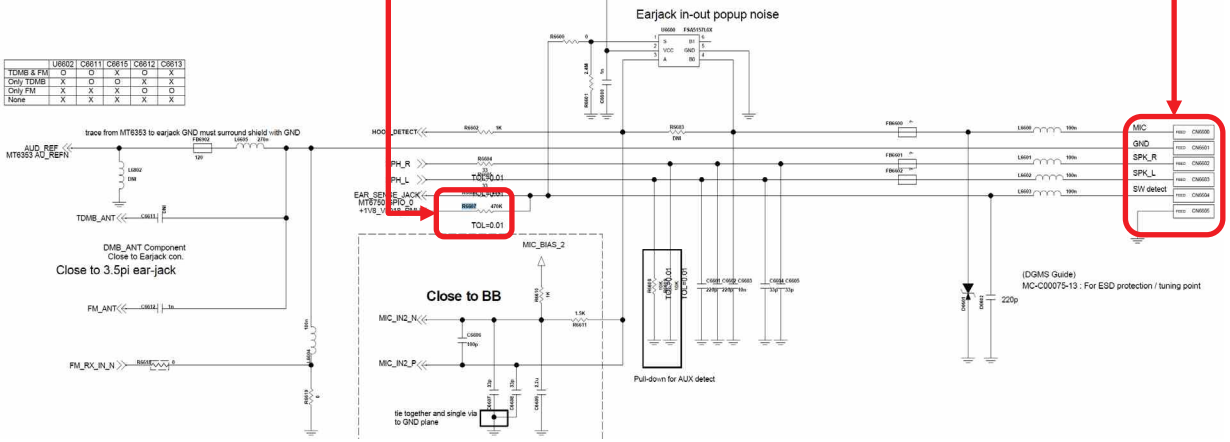

Copyright © 2017 LG Electronics. Inc. All right reserved. Only training and service purposes

3.10.5 FM_Radio

Disable detecting headset insert or No FM sound from Earphone, Check the Ear mic and MT6625L

Checking Flow

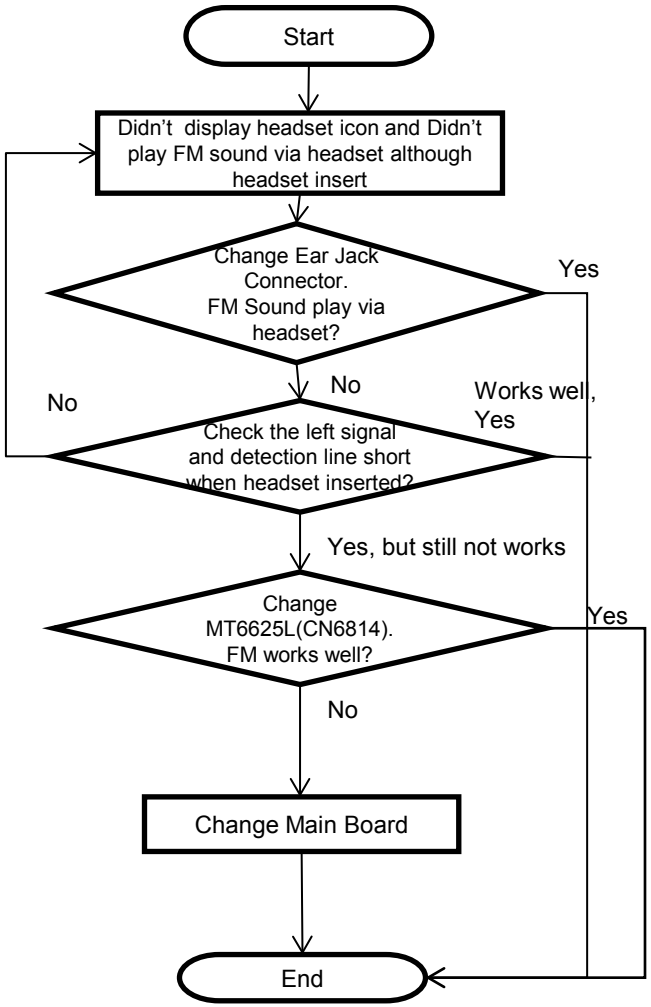

Image

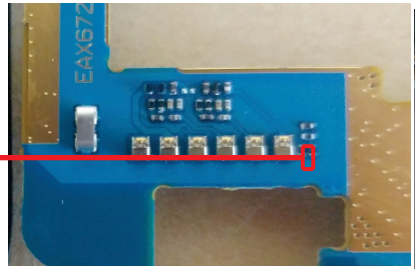

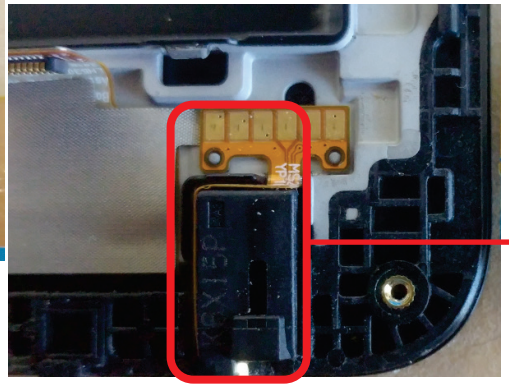

Jack detect
Voltage Level Check at R6607
- 1.8V(before Jack)
- low(after Jack)

Circuit Diagram

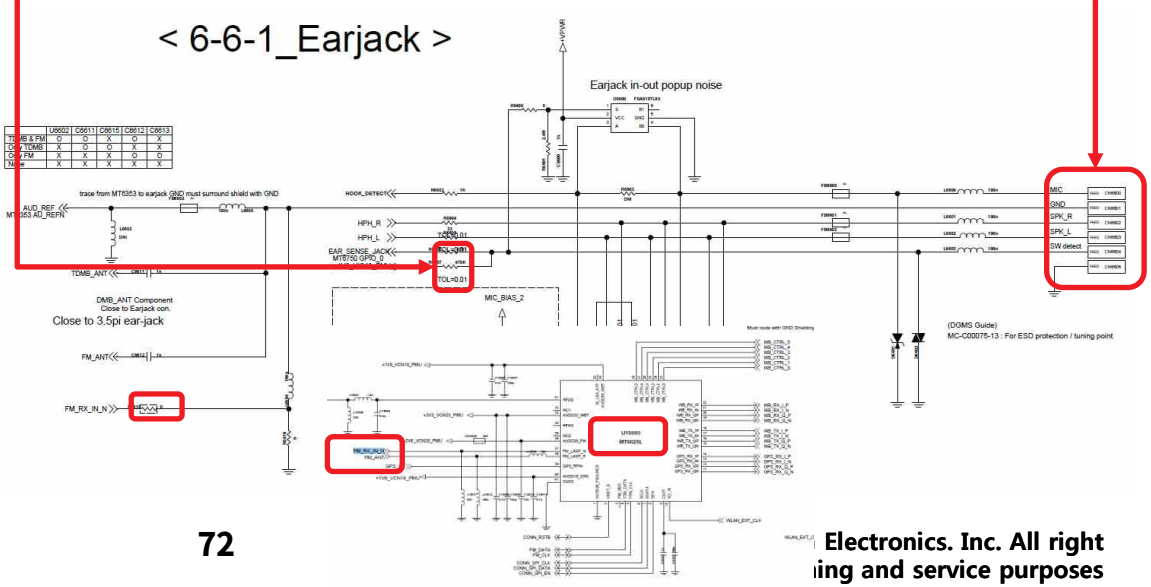

Electronics. Inc. All right
ing and service purposes

3.11 Checking LCD Block

The LCD control signals are generated by MT6750. Its interface is MIPI having four data lanes and one clock lane.

Checking Flow

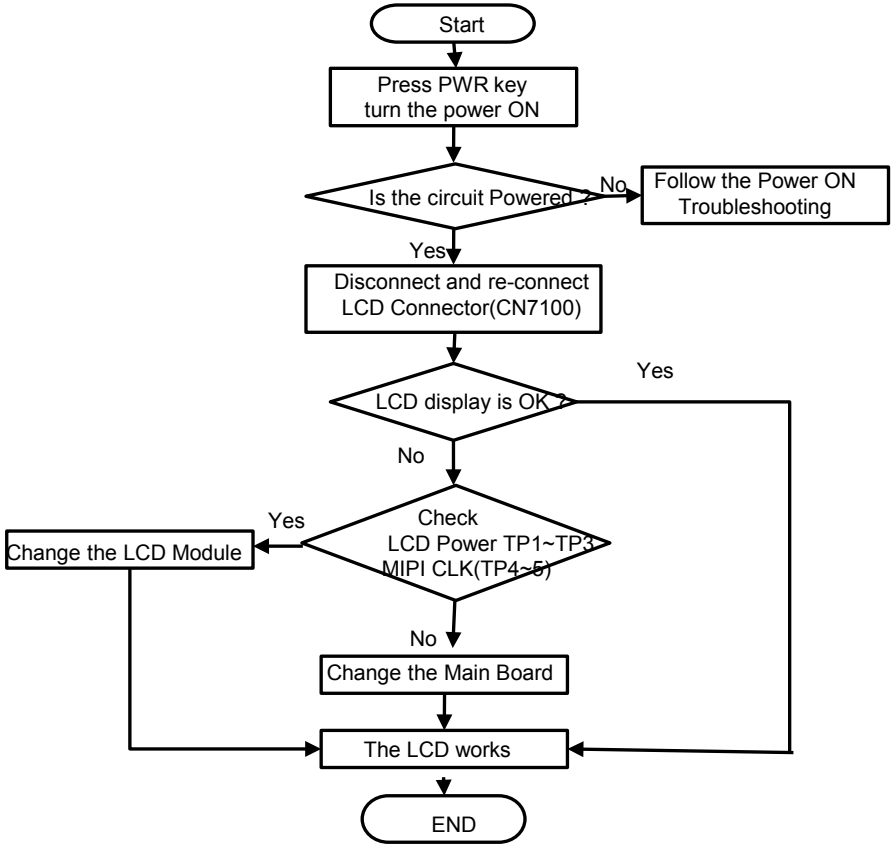

Image

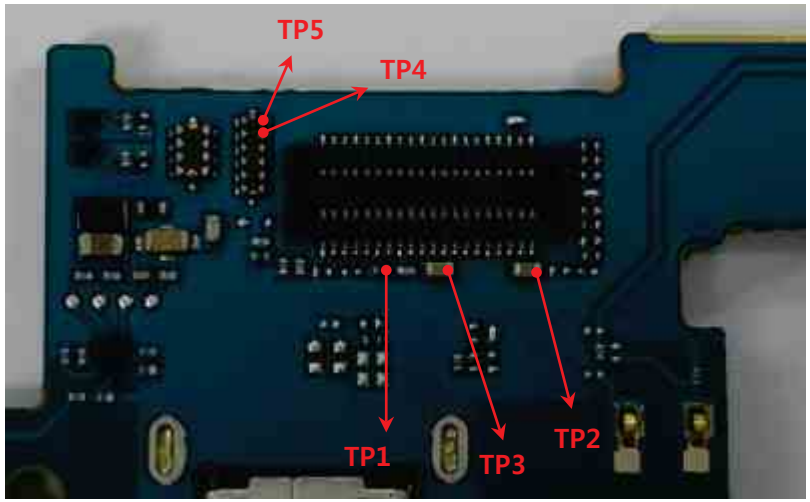

Copyright © 2017 LG Electronics. Inc. All right reserved. Only training and service purposes

3.11 Checking LCD Block

The LCD control signals are generated by MT6750. Its interface is MIPI having four data lanes and one clock lane.

Circuit Diagram

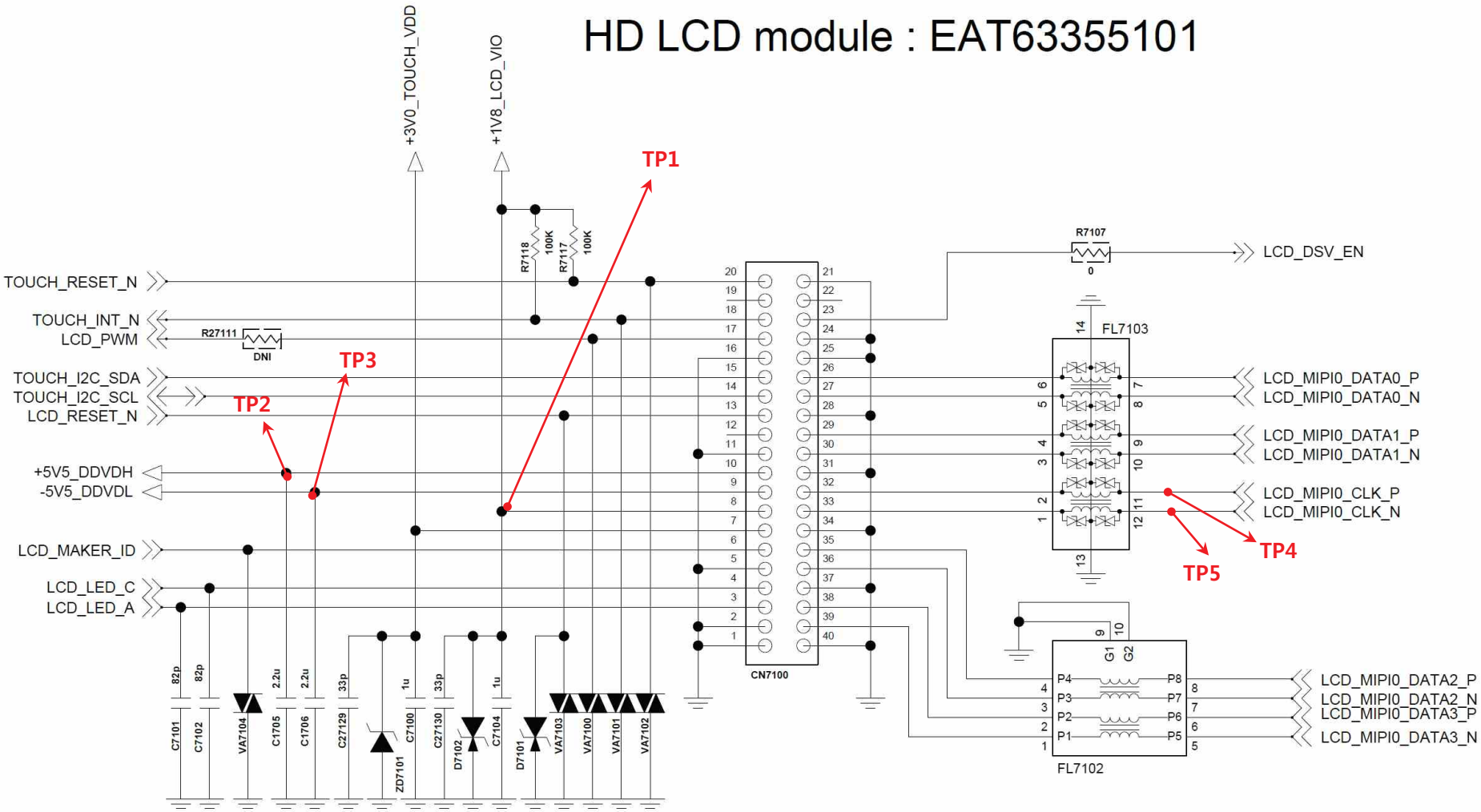

Copyright © 2017 LG Electronics. Inc. All right reserved. Only training and service purposes

3.12 Checking Touch Block

The Touch control signals are generated by MT6750. It is assembled with LCD.

Checking Flow

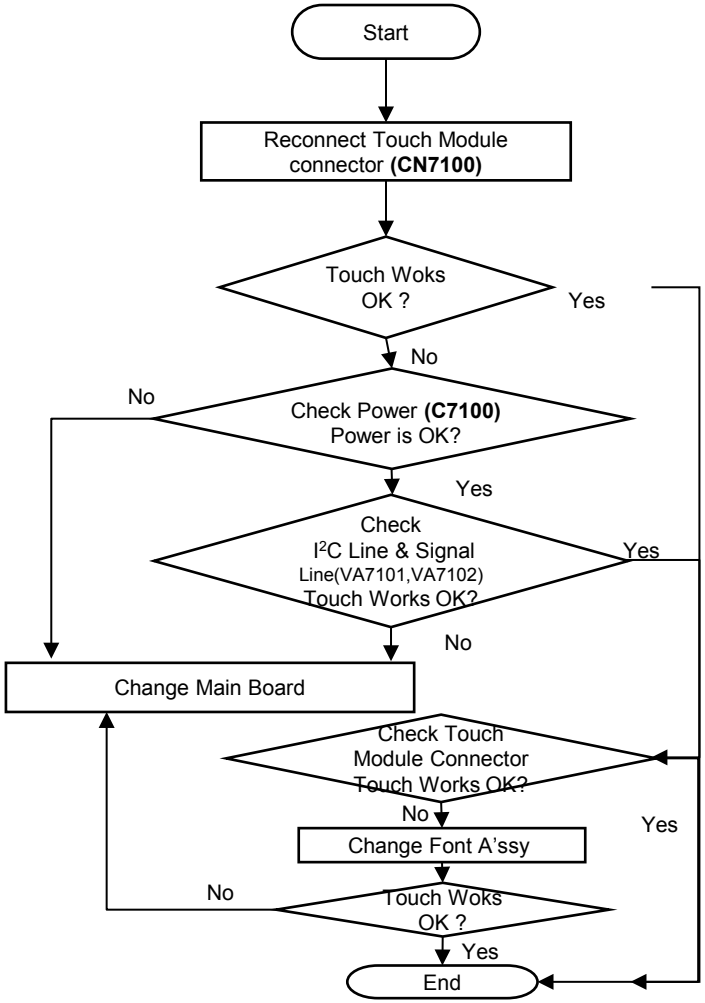

Image

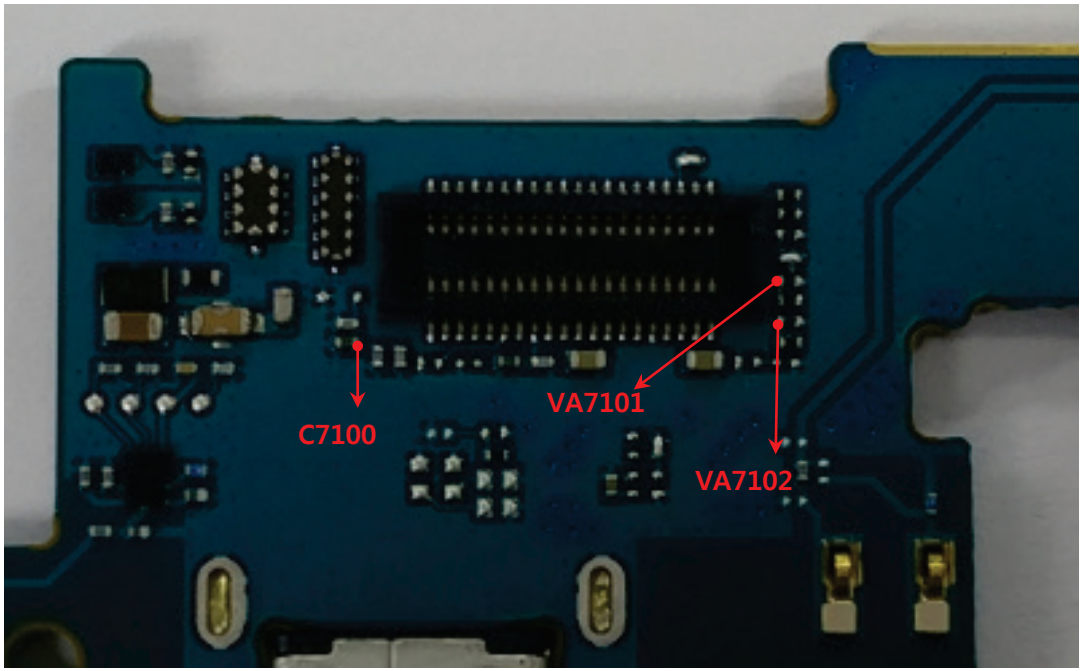

Copyright © 2017 LG Electronics. Inc. All right reserved. Only training and service purposes

3.12 Checking Touch Block

The Touch control signals are generated by MT6750. It is assembled with LCD.

Circuit Diagram

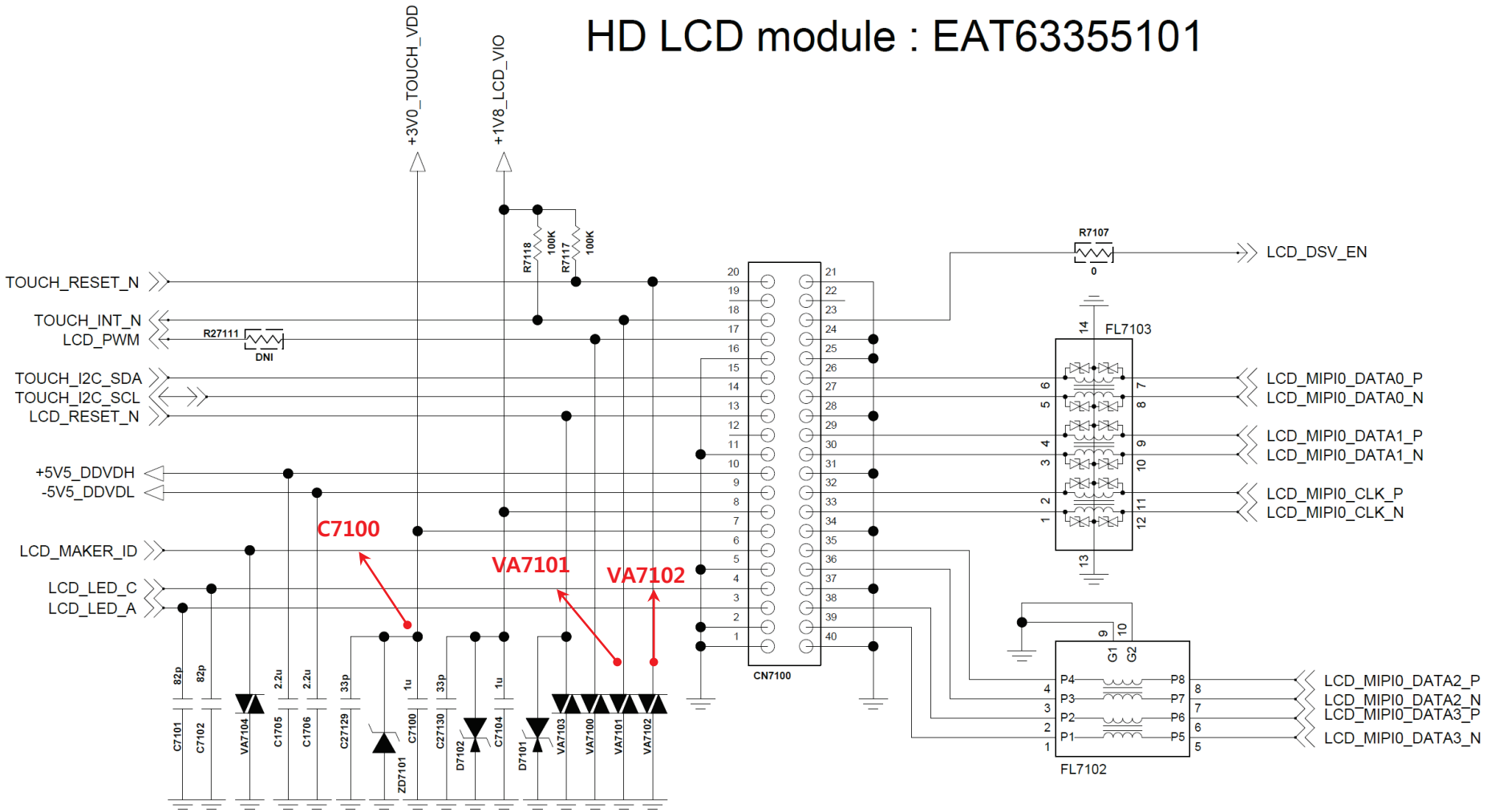

Copyright © 2017 LG Electronics. Inc. All right reserved. Only training and service purposes

3.13 Checking accelmeter+compass sensor Block

The Accl. & compass sensors are calibrated by using SW algorithm.

Checking Flow

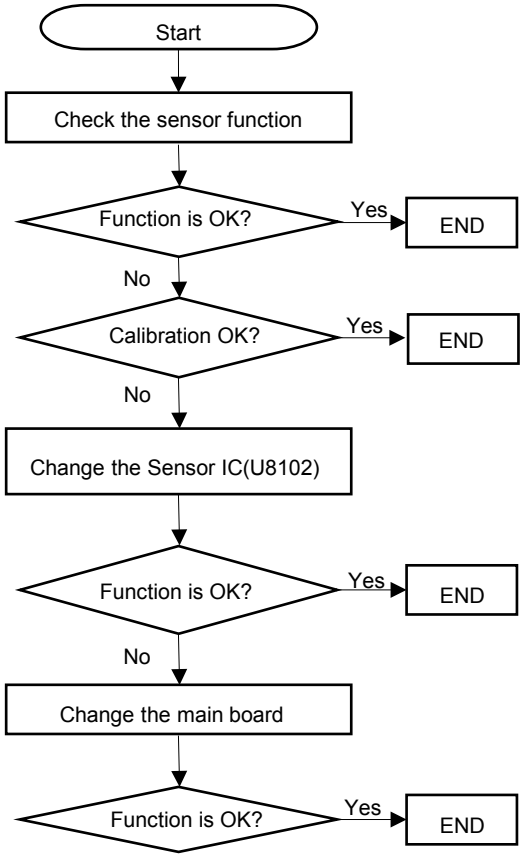

Image

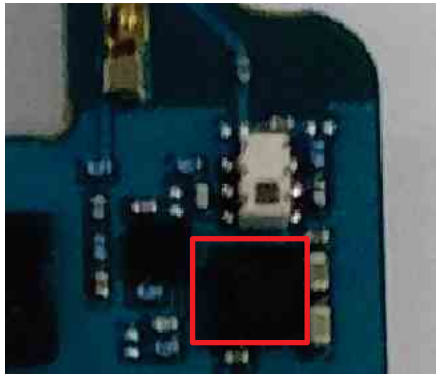

Circuit Diagram

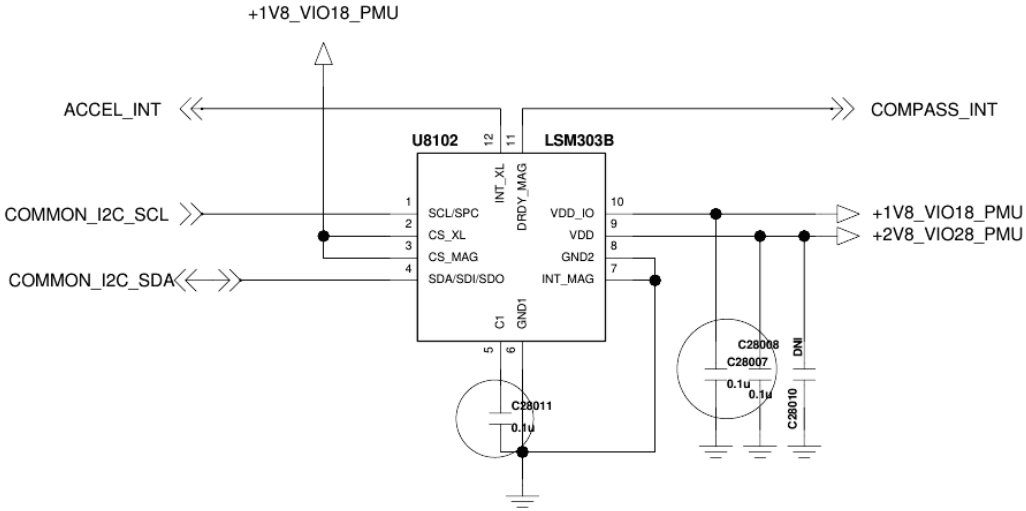

Copyright © 2017 LG Electronics. Inc. All right reserved. Only training and service purposes

3.13 Checking proximity sensor Block

Proximity Sensor is worked as below: Send Key click ➔ Phone number click ➔ Call connected ➔ Object moved at the sensor ➔ Control the screen's on/off operation automatically

Checking Flow

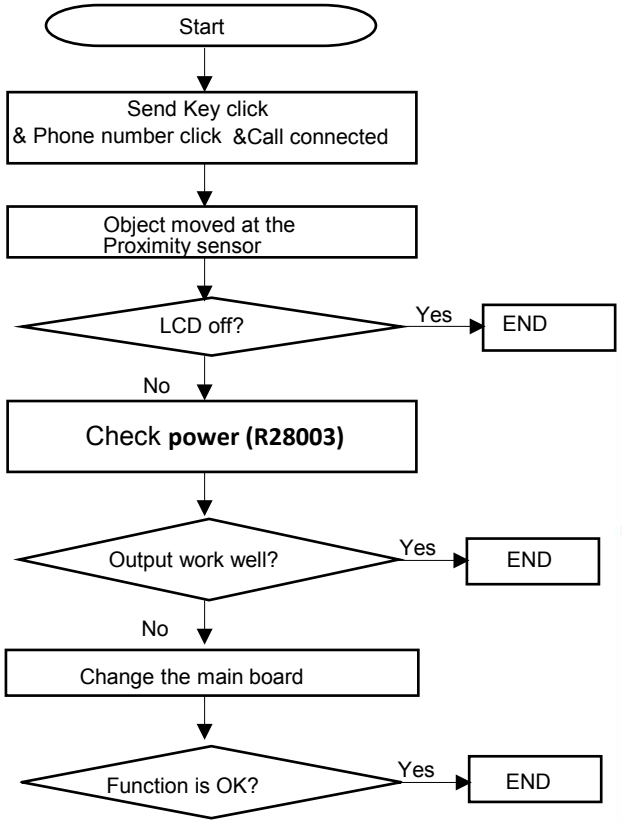

Image

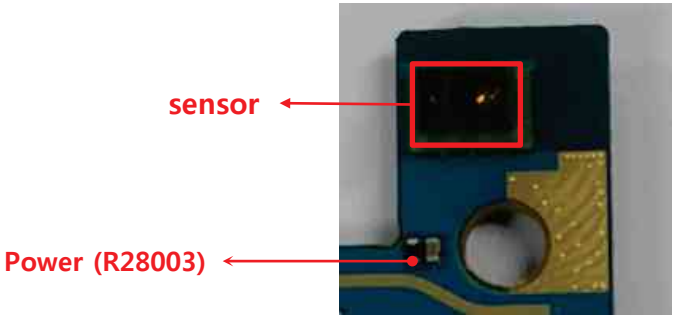

Circuit Diagram

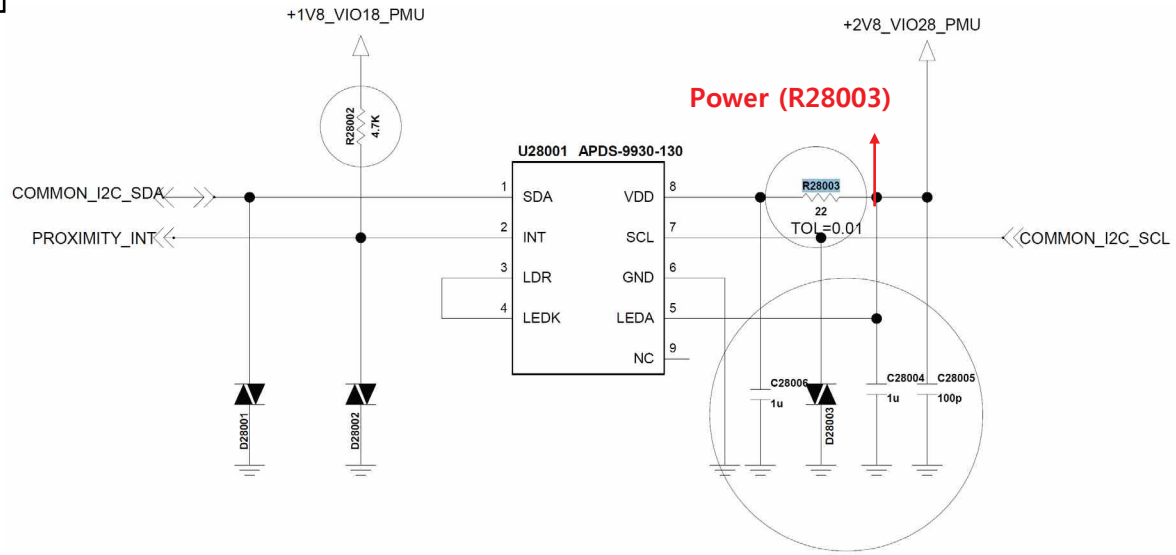

Copyright © 2017 LG Electronics. Inc. All right reserved. Only training and service purposes

3.XX Checking Main Camera Block

13M camera control signals are generated by MT650 (U21000 : Main Chipset). And powered by MT6353 (U4100 : PMIC)

Checking Flow

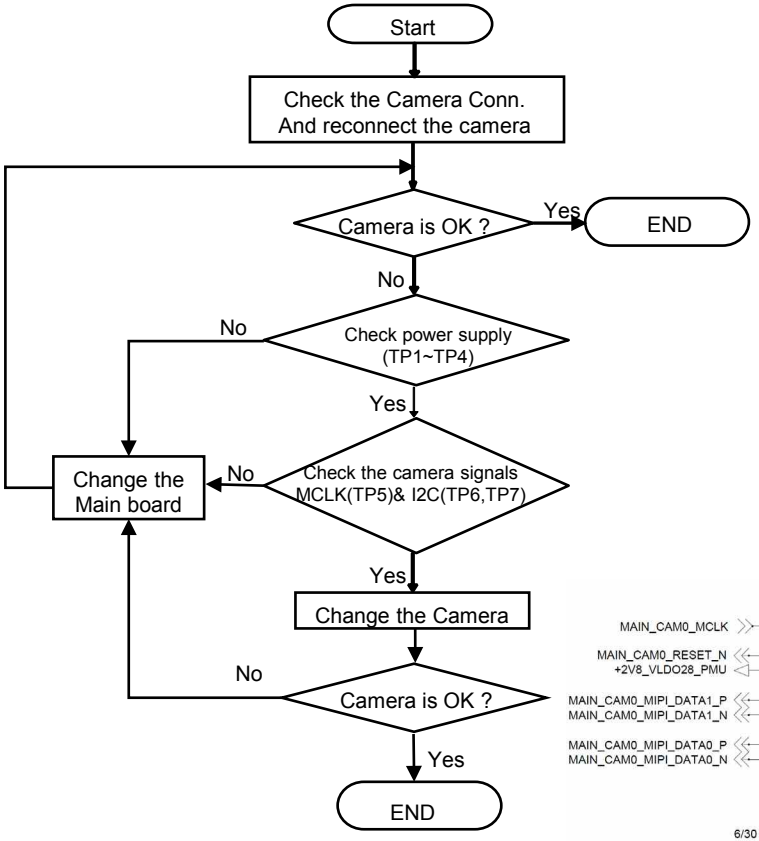

Image

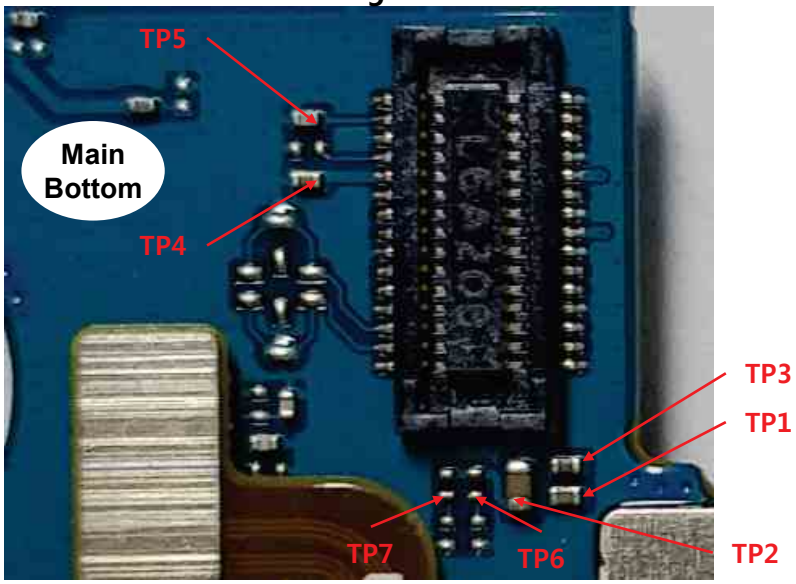

Circuit Diagram

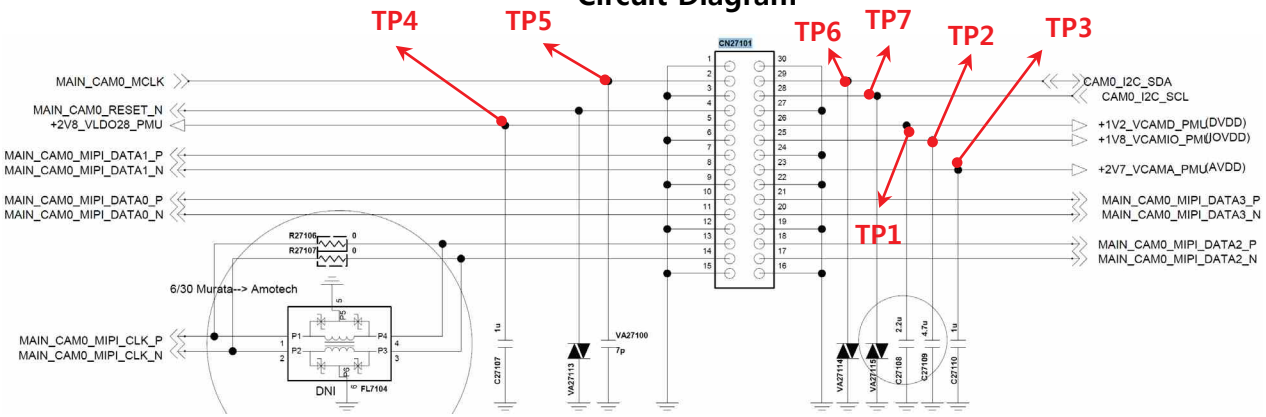

Copyright © 2017 LG Electronics. Inc. All right reserved. Only training and service purposes

3.XX Checking Front Camera Block

5M camera control signals are generated by MT650 (U21000 : Main Chipset). And powered by MT6353 (U4100 : PMIC)

Checking Flow

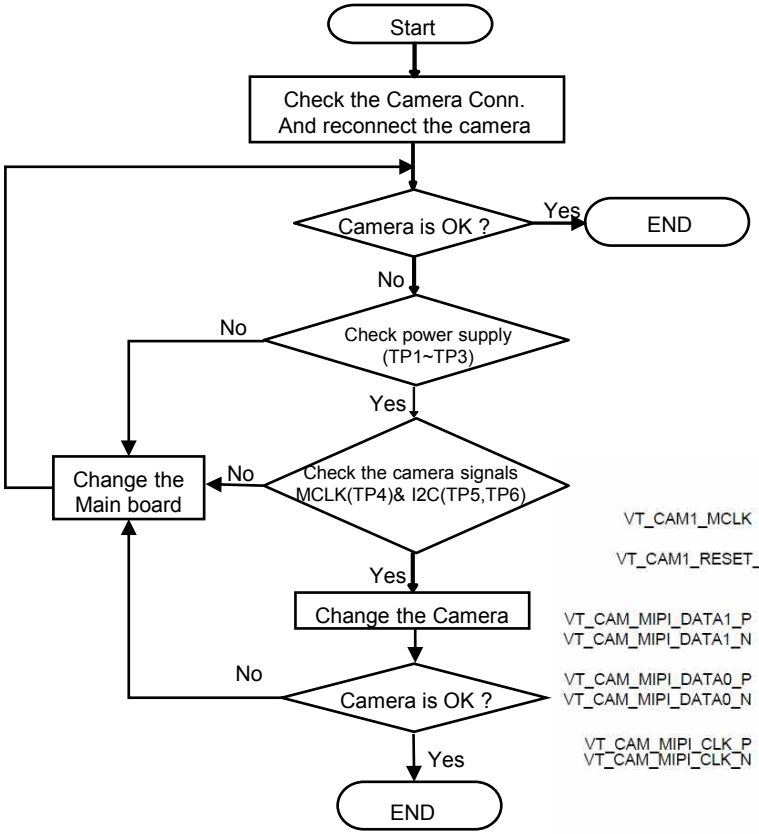

Image

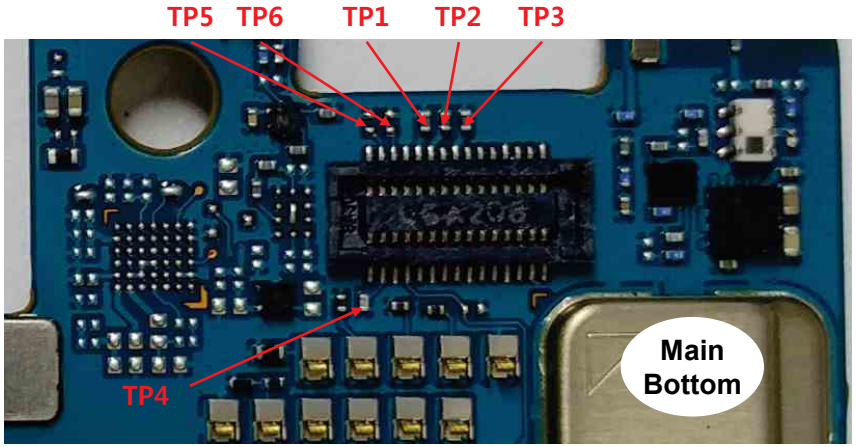

Circuit Diagram

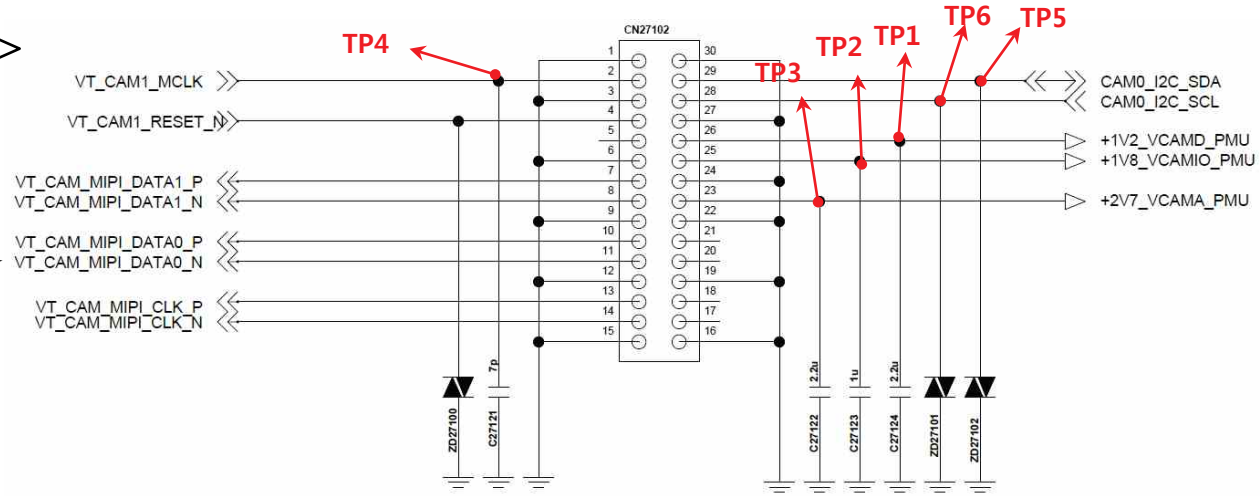

Copyright © 2017 LG Electronics. Inc. All right reserved. Only training and service purposes

3.xx Checking Motor Block

Motor control signals are generated by MT6353 (U4100 : PMIC)

Checking Flow

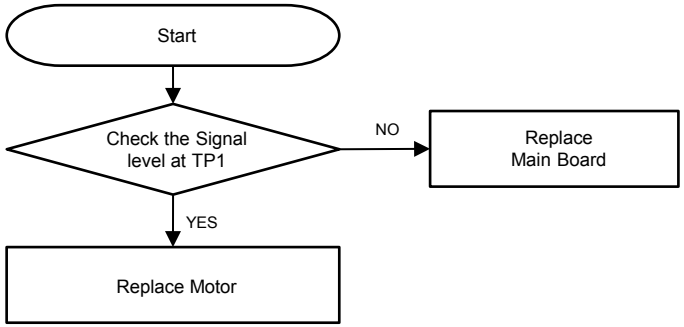

Image

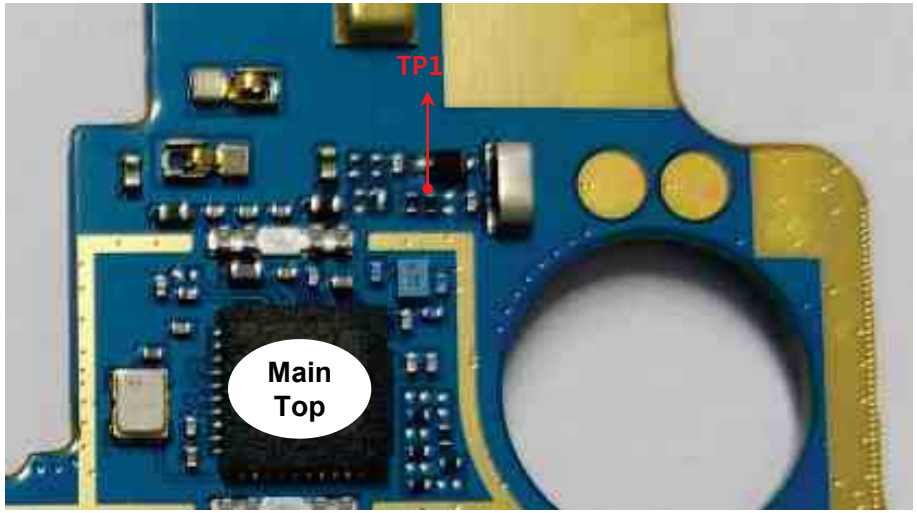

Circuit Diagram

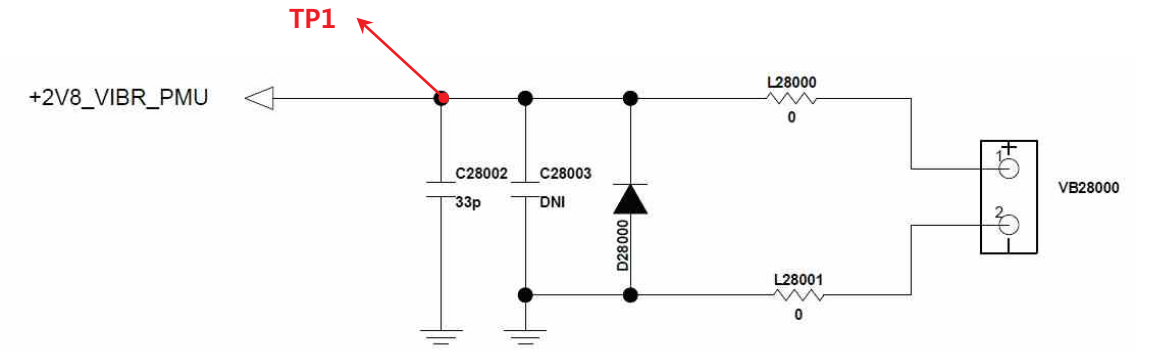

Copyright © 2017 LG Electronics. Inc. All right reserved. Only training and service purposes

3.10.5 FM_Radio

Disable detecting headset insert or No FM sound from Earphone, Check the Ear Mic and MT6625L

Checking Flow

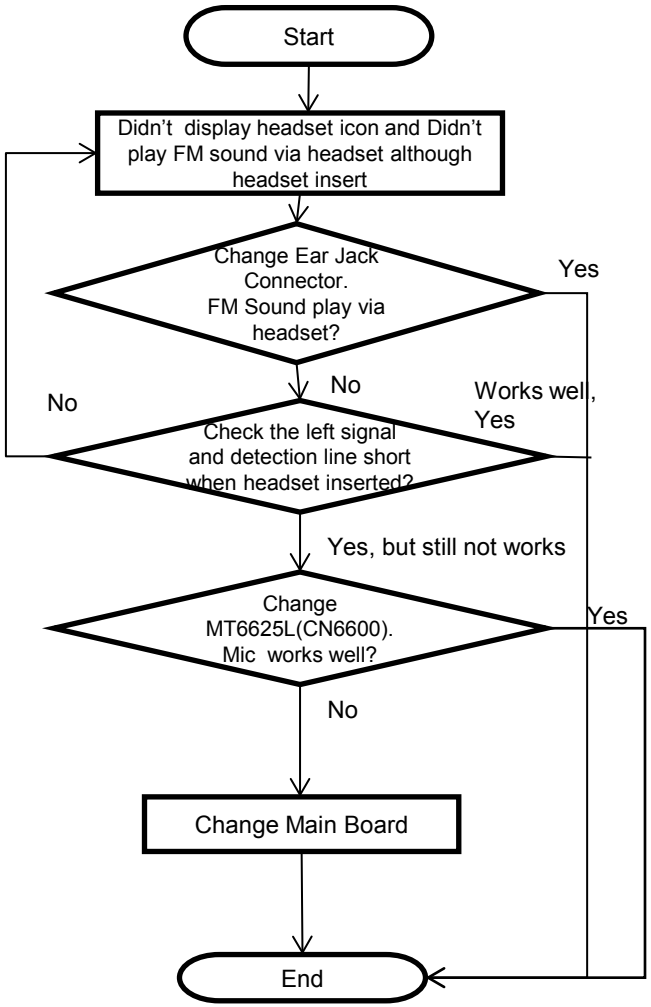

Image (Top)

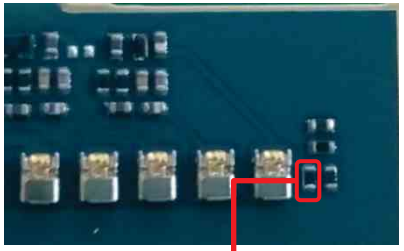

Image (Bottom)

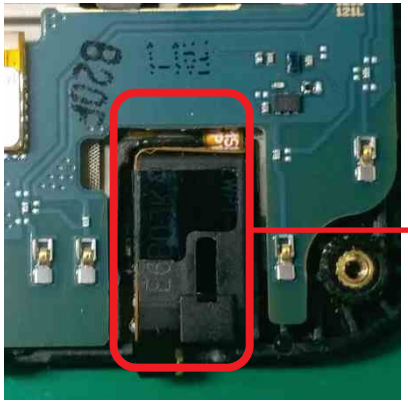

Jack detect
Voltage Level Check at R6607
- 1.8V(before Jack)
- low(after Jack)

Circuit Diagram

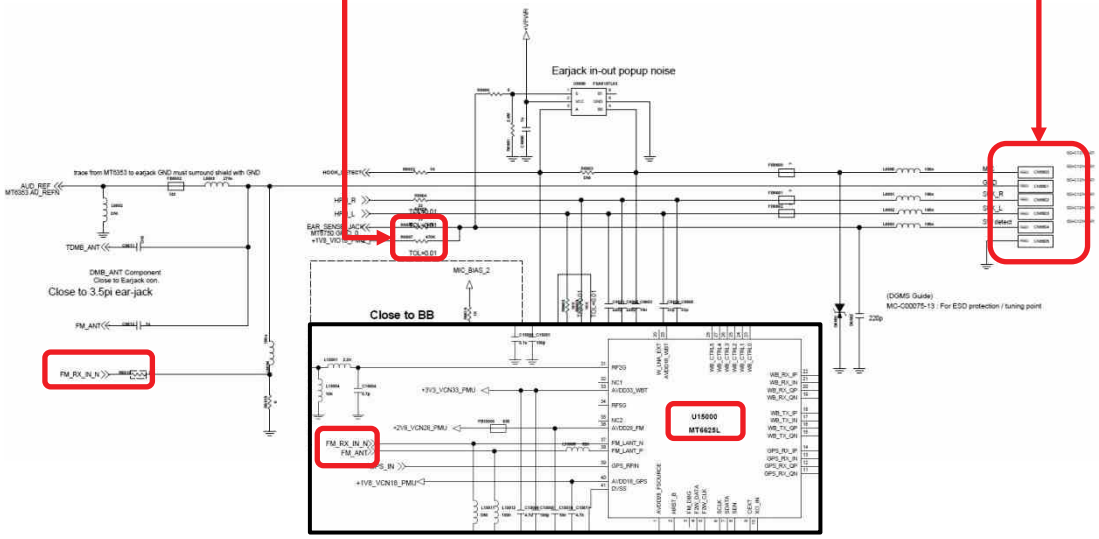

Copyright © 2017 LG Electronics. Inc. All right reserved. Only training and service purposes

3.16 Connectivity RF PART

3.16.1 Checking RF Signal TRX path(WiFi, BT)

Checking Flow

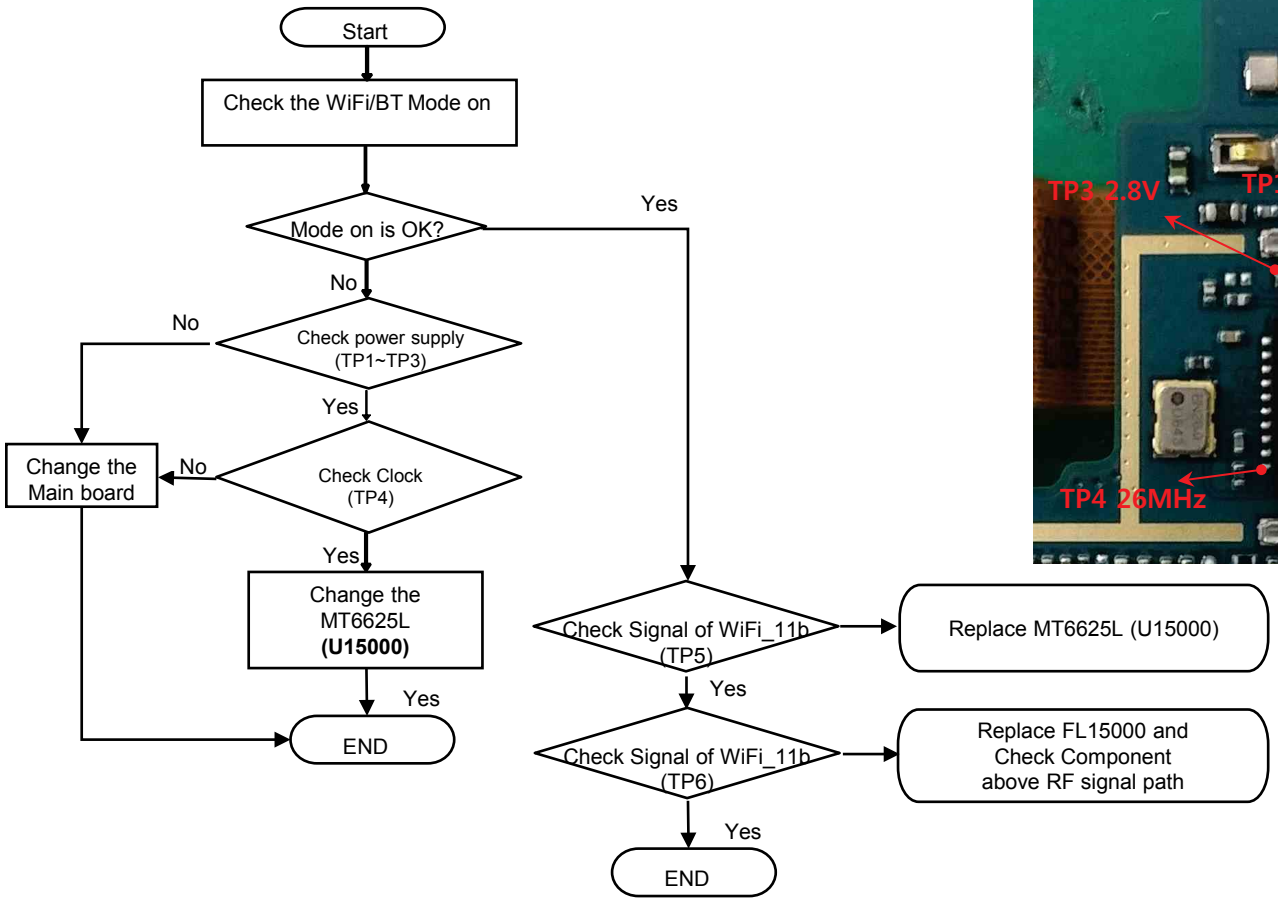

Image (Top)

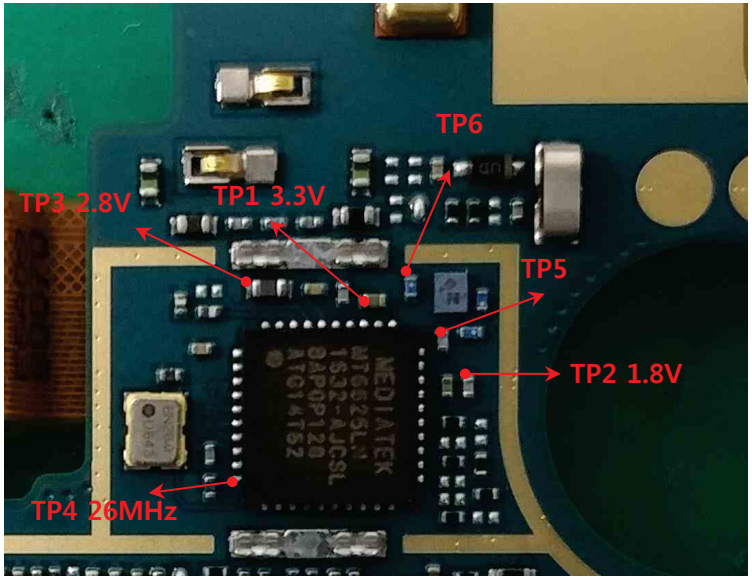

Copyright © 2017 LG Electronics. Inc. All right reserved. Only training and service purposes

3.16 Connectivity RF PART

3.16.1 Checking RF Signal TRX path(WiFi, BT)

Circuit Diagram

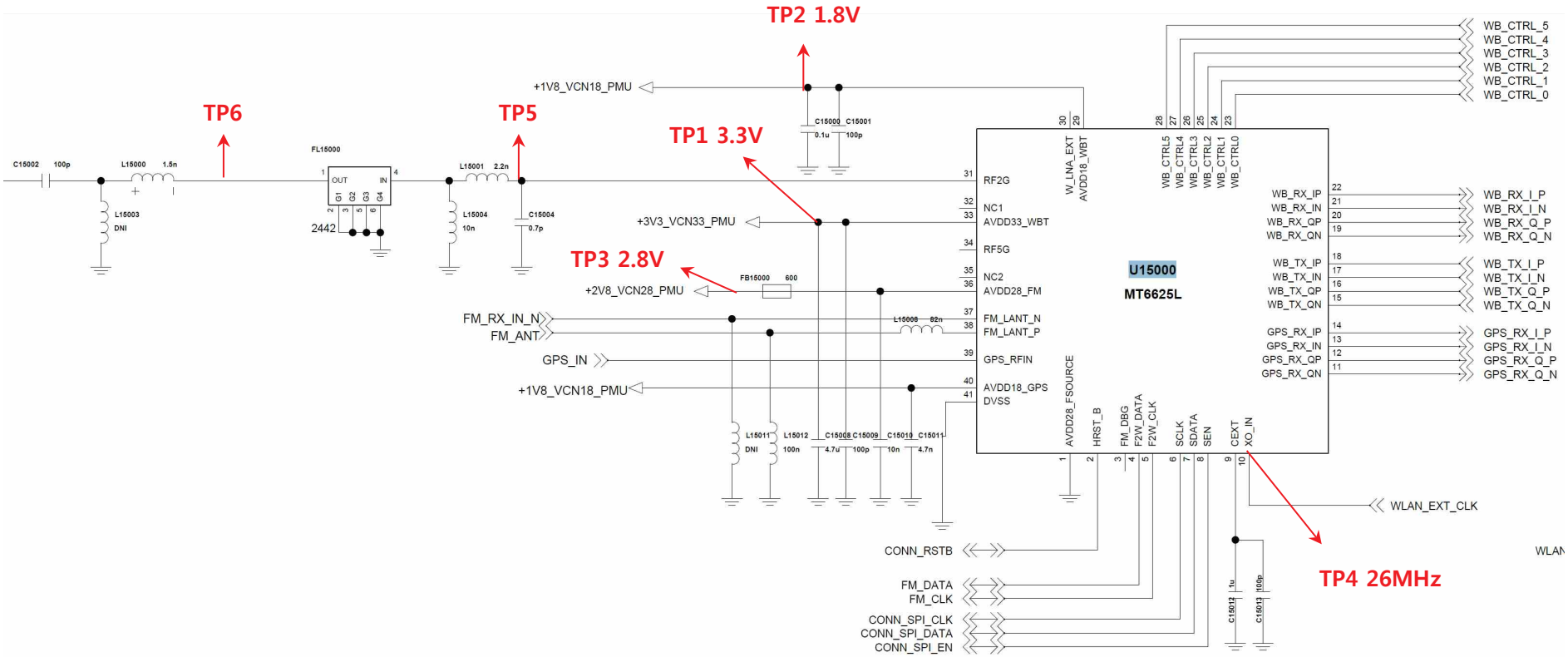

Copyright © 2017 LG Electronics. Inc. All right reserved. Only training and service purposes

3.16 Connectivity RF PART

3.16.2 Checking RF Signal TRX path(GPS)

Checking Flow

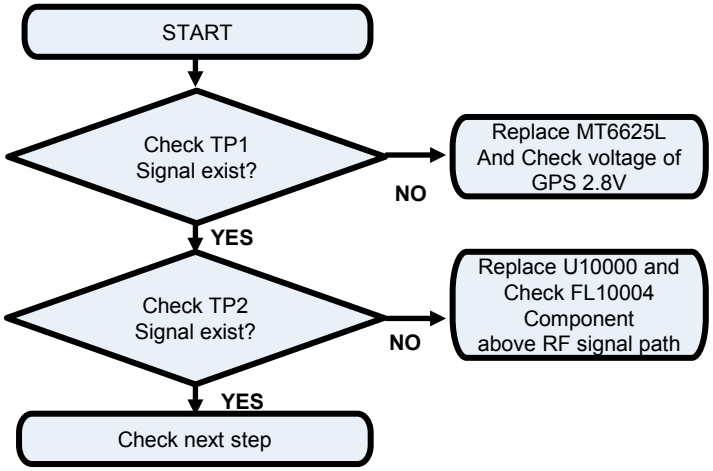

Image (Bottom)

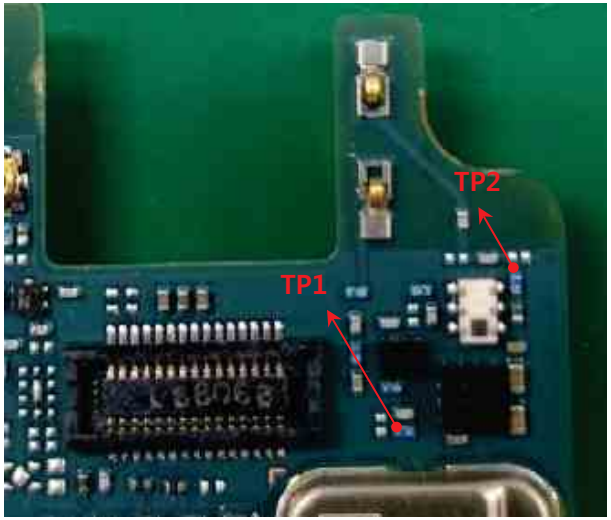

Circuit Diagram

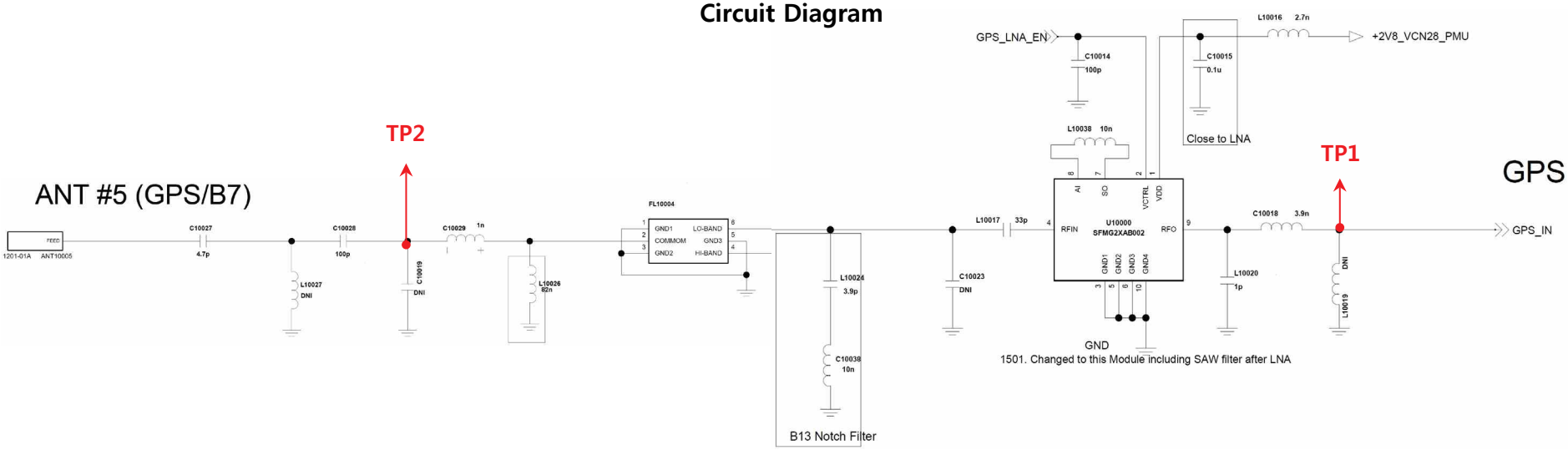

Copyright © 2017 LG Electronics. Inc. All right reserved. Only training and service purposes

LG-M250 Block diagram : Total

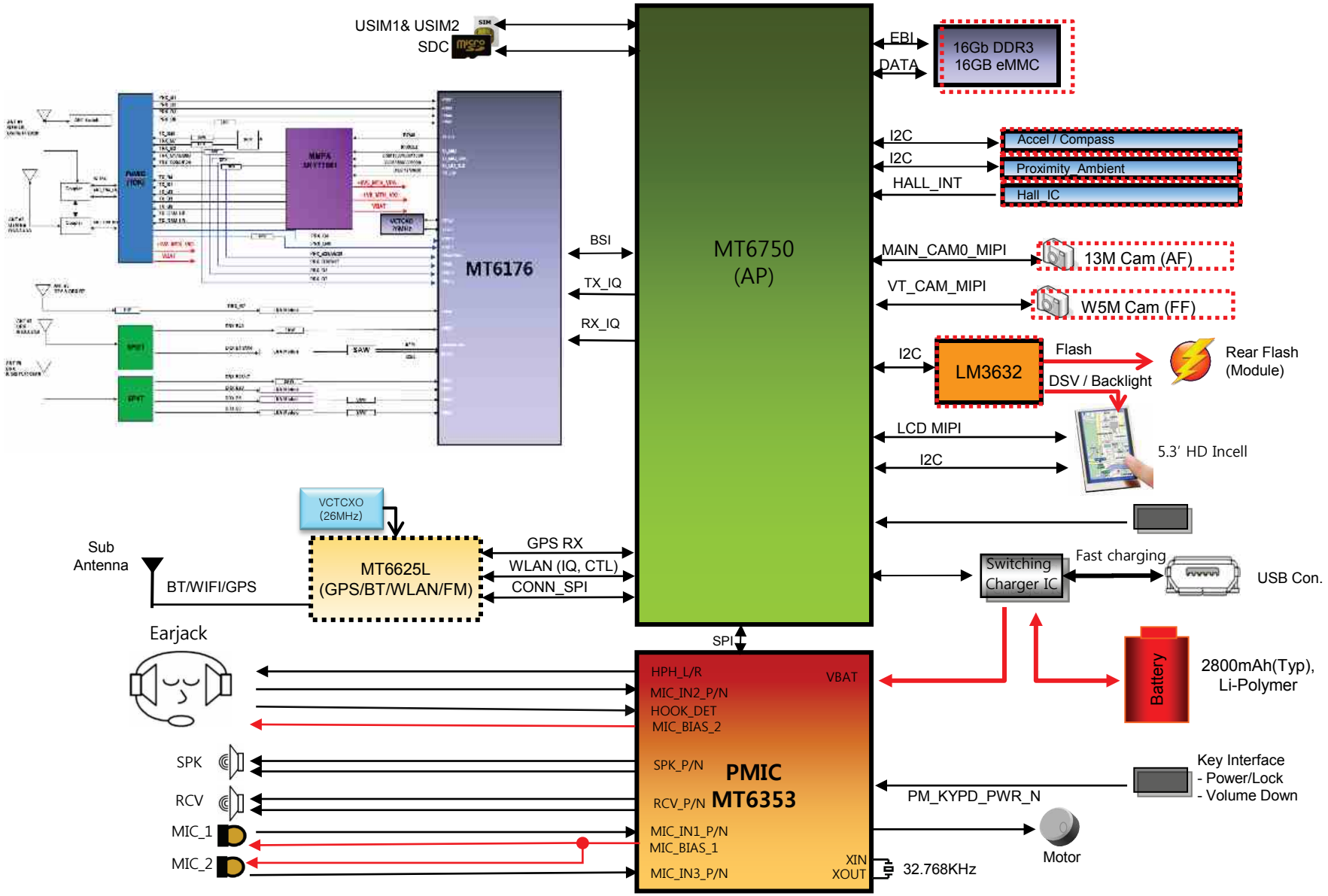

Copyright © 2017 LG Electronics. Inc. All right reserved. Only training and service purposes

1. Block diagram : RF Part LG-M250

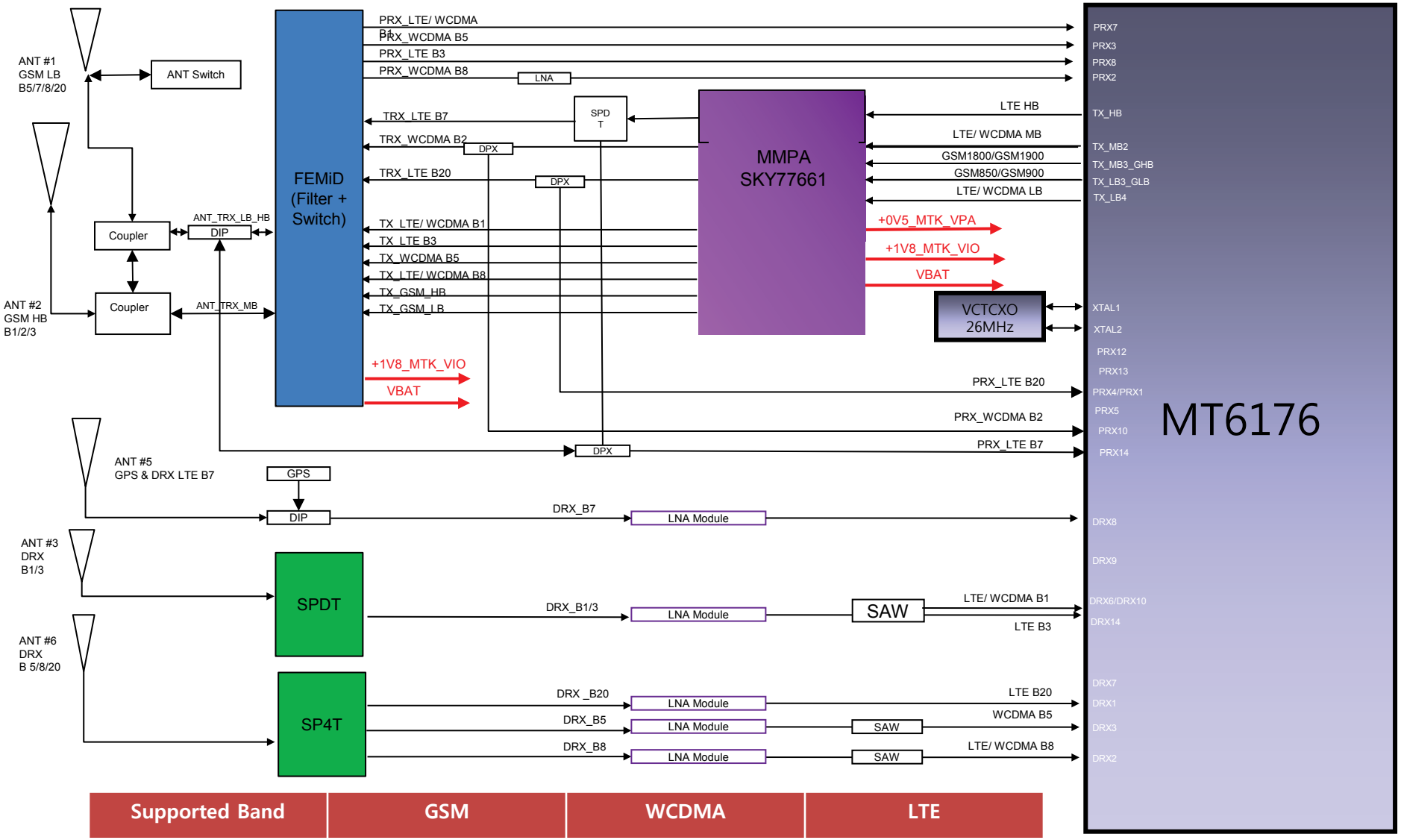

Supported Band	GSM	WCDMA	LTE
LGM250	850, 900, 1800, 1900	B1, 2, 5 ,8	B1, 3, 7, 8 ,20

Copyright © 2017 LG Electronics. Inc. All right reserved. Only training and service purposes

2. Block diagram : Connectivity (WIFI,BT / FM / GPS)

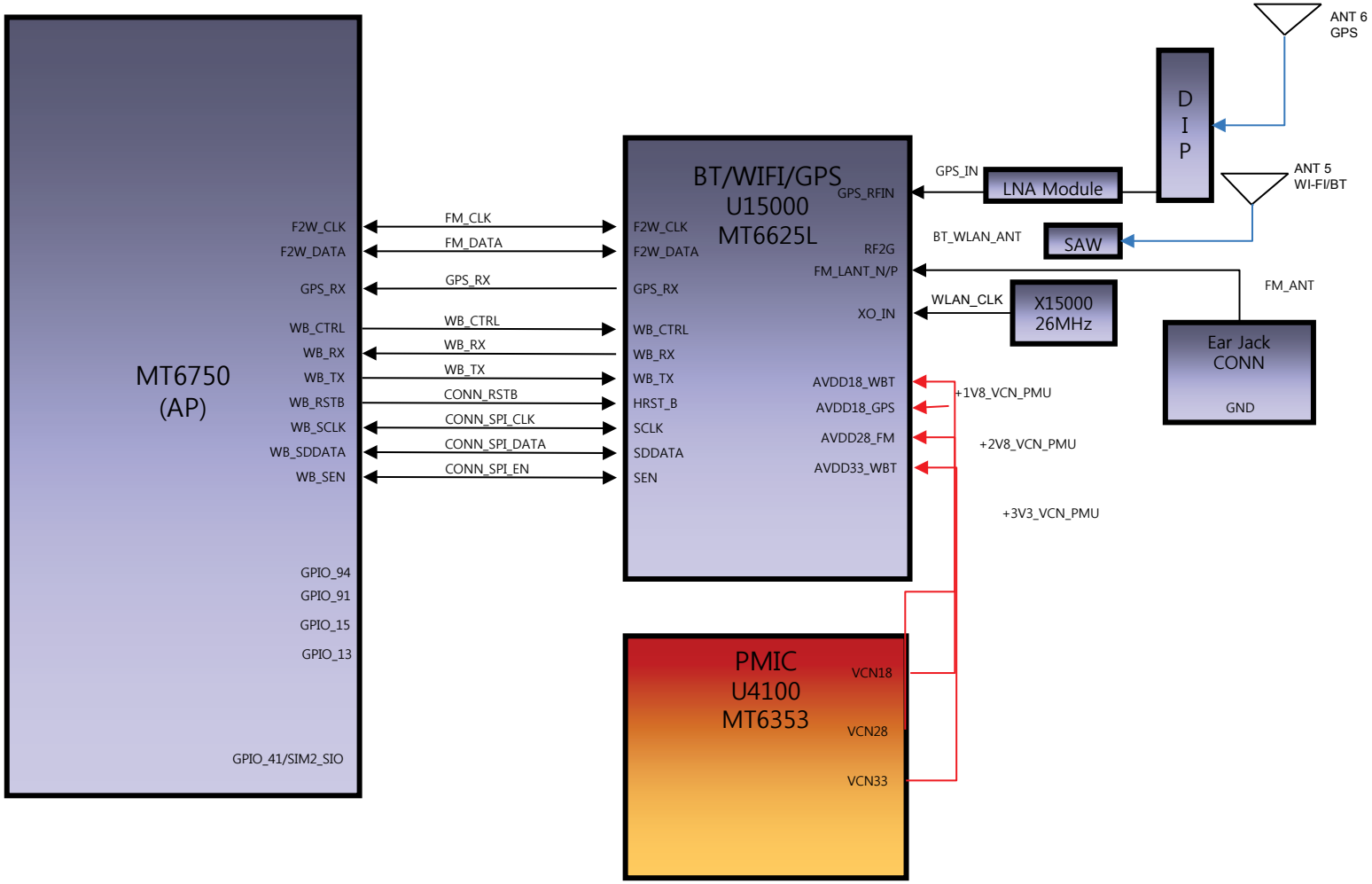

Copyright © 2017 LG Electronics. Inc. All right reserved. Only training and service purposes

3. Block diagram : Power

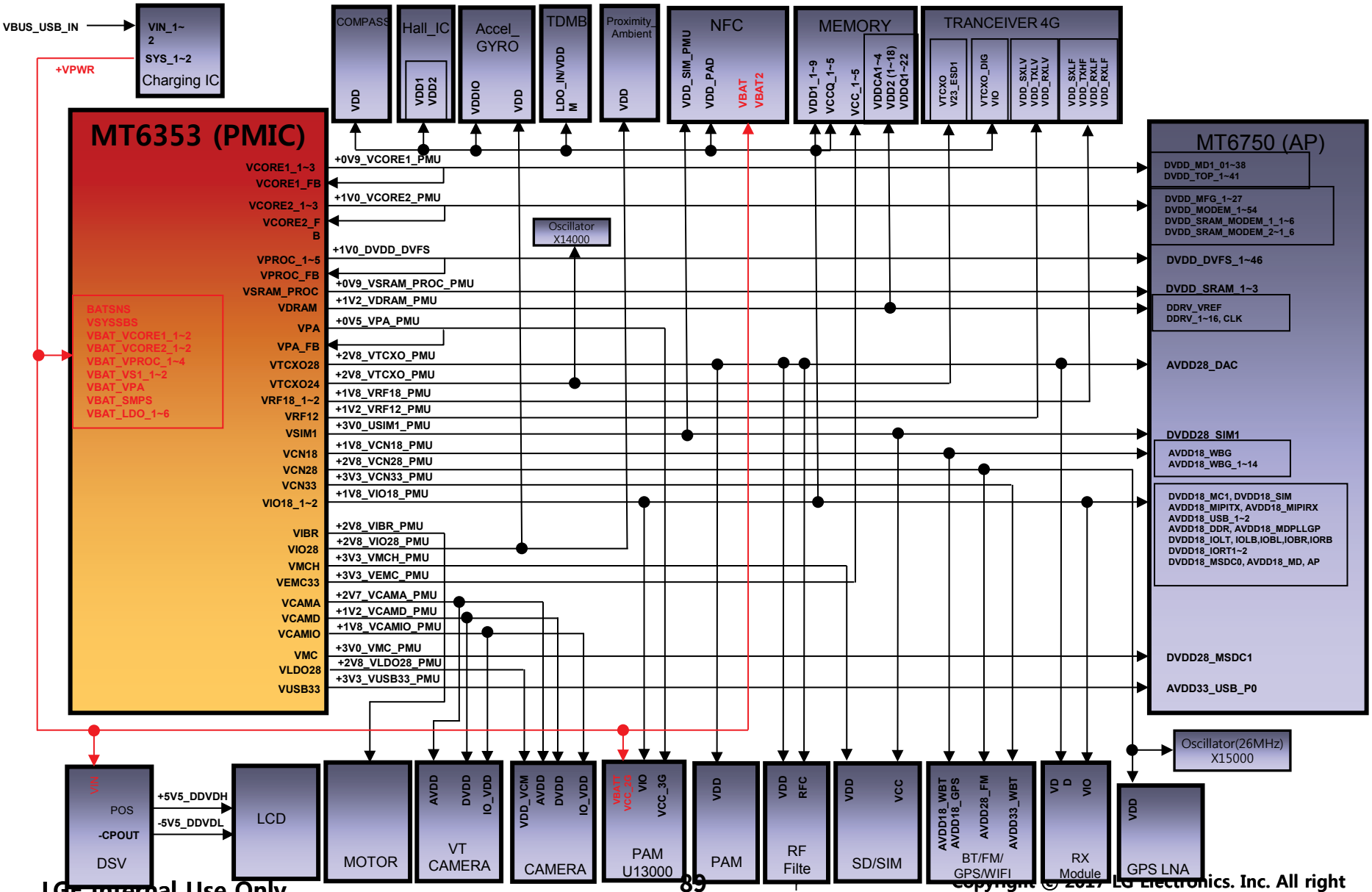

Copyright © 2017 LG Electronics. Inc. All right reserved. Only training and service purposes

4. Block diagram : AUDIO

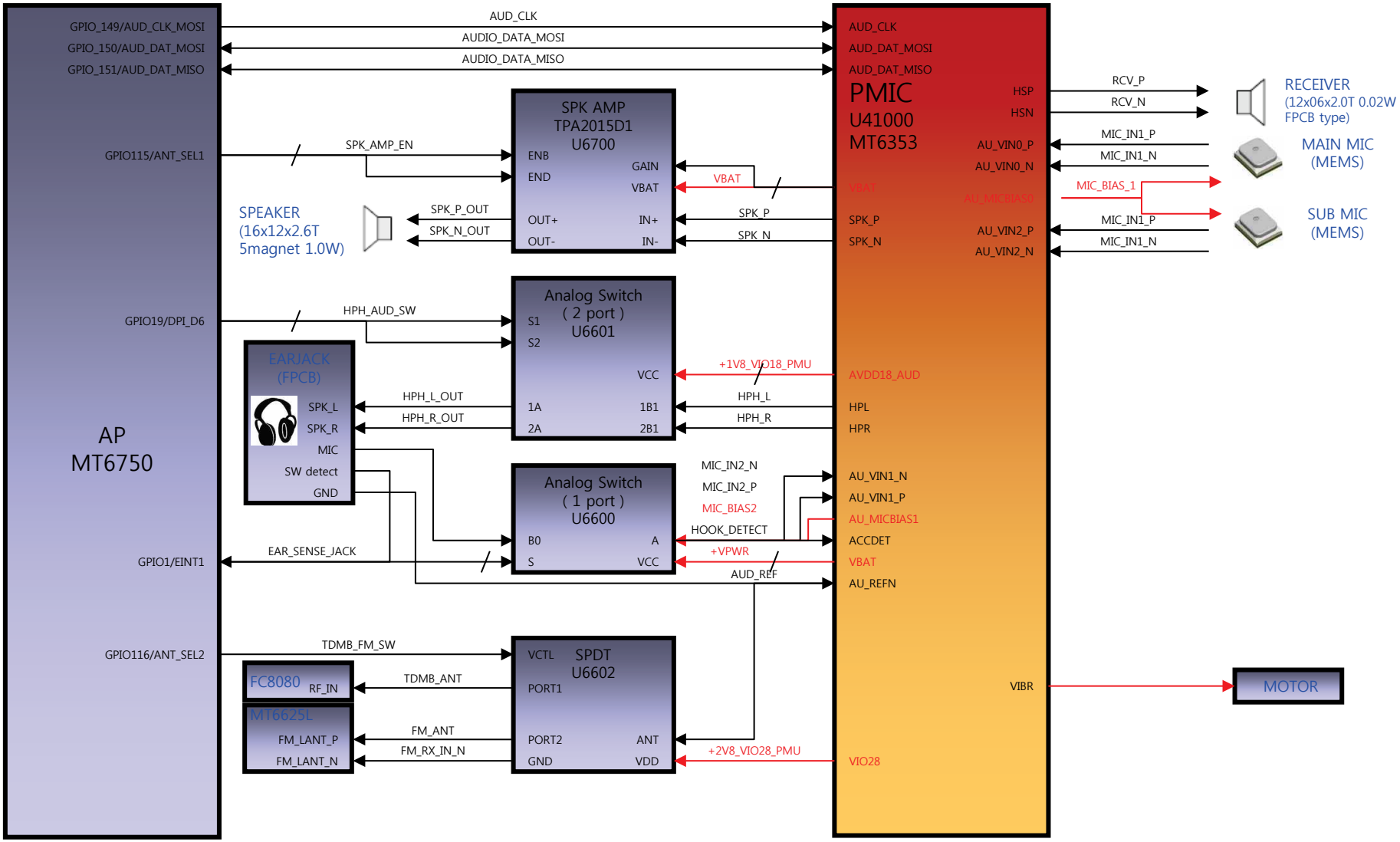

Copyright © 2017 LG Electronics. Inc. All right reserved. Only training and service purposes

5. Block diagram : SENSOR / CHARGER

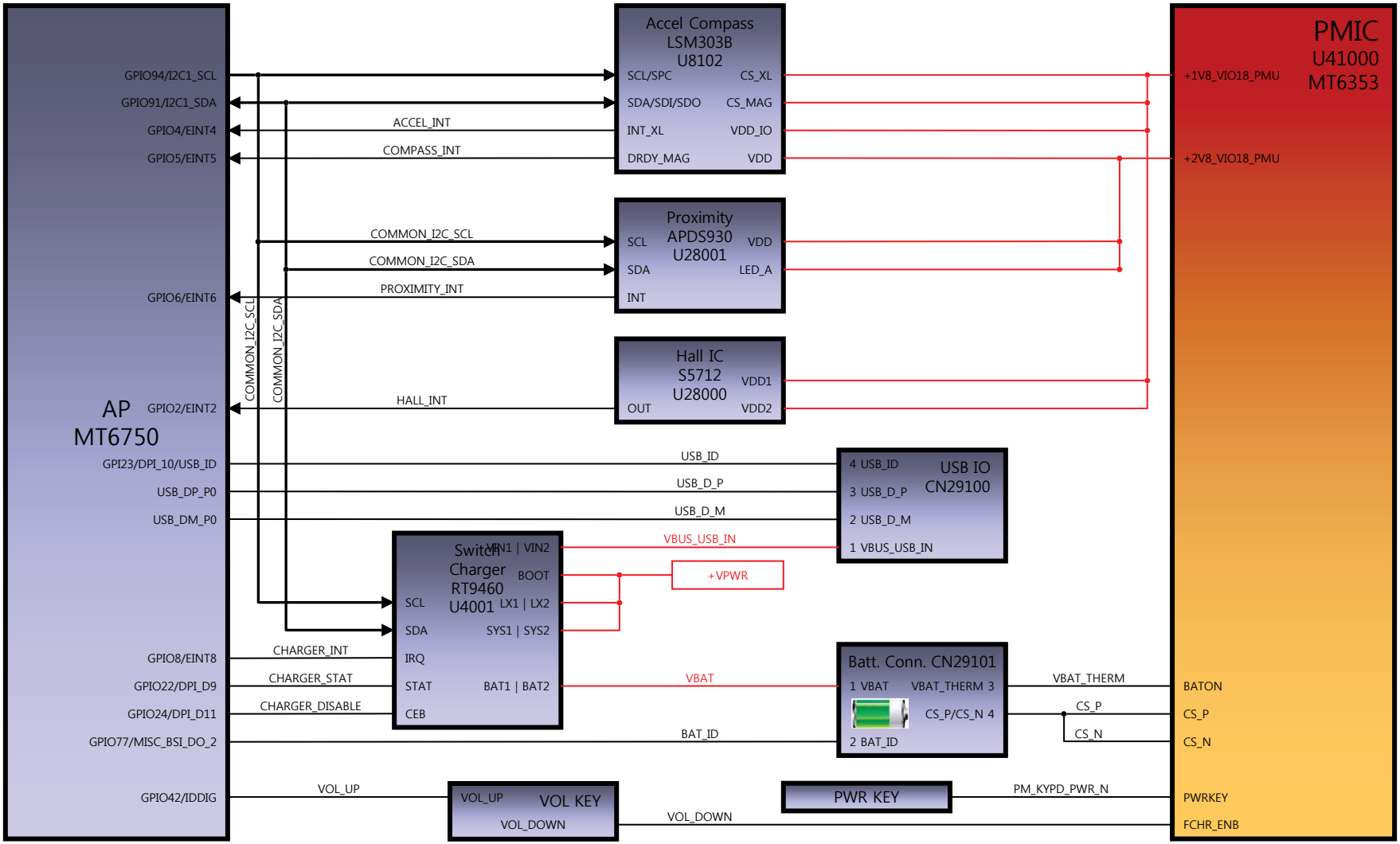

Copyright © 2017 LG Electronics. Inc. All right reserved. Only training and service purposes

6. Block diagram : LCD(INCELL TOUCH) / Main CAM / VT CAM

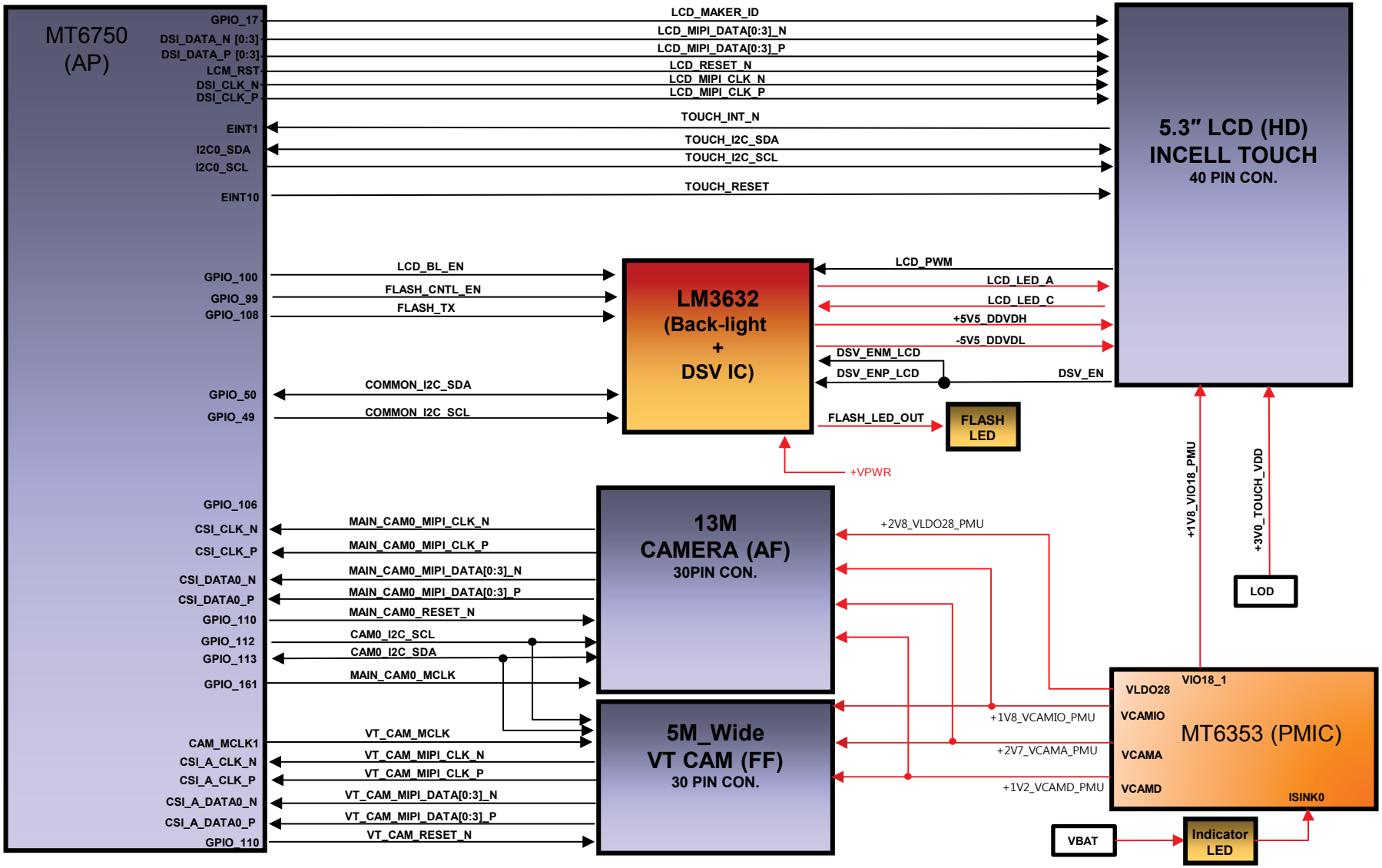

Copyright © 2017 LG Electronics. Inc. All right reserved. Only training and service purposes

7. Block diagram : Memory / USIM / Micro SD

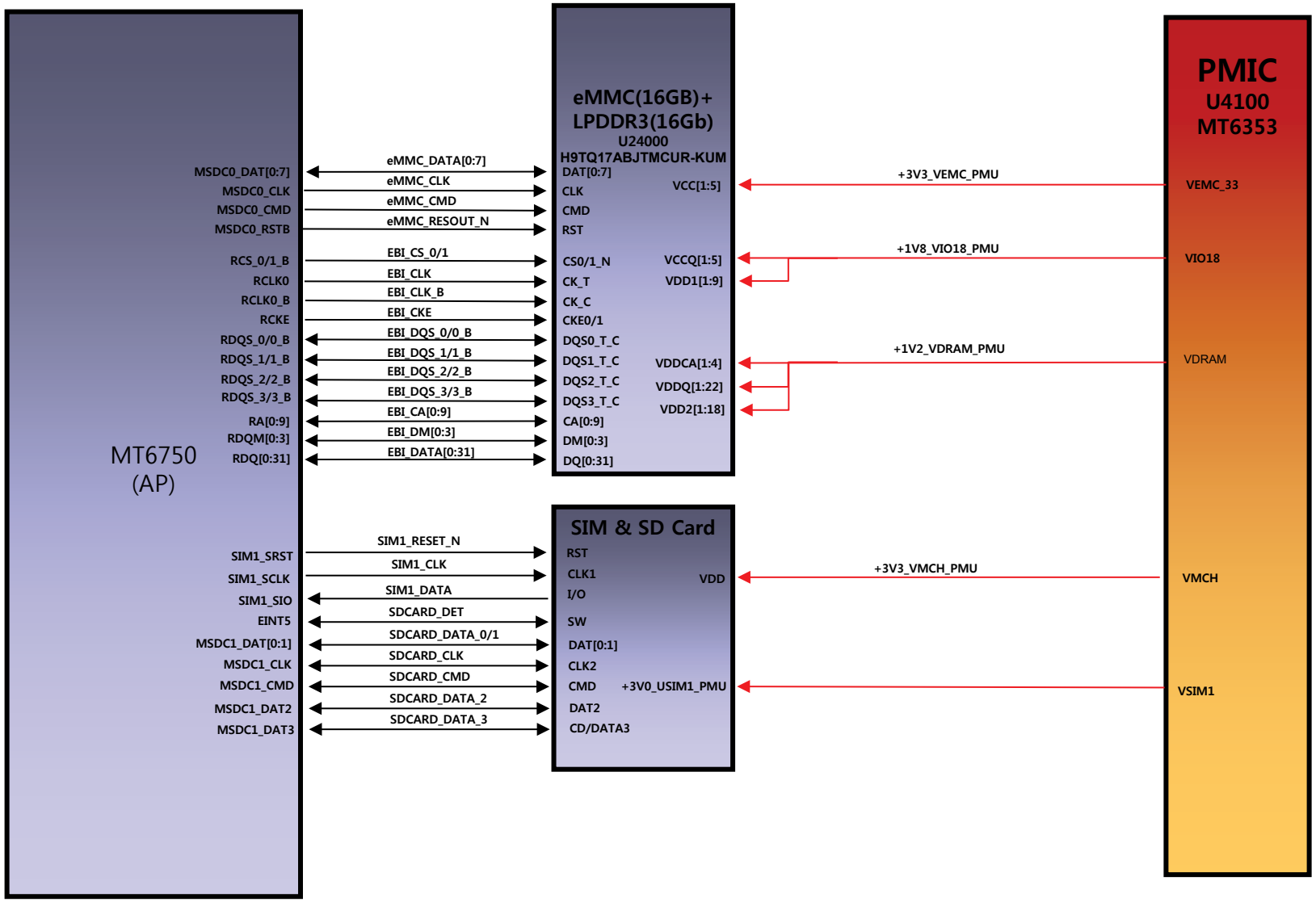

Copyright © 2017 LG Electronics. Inc. All right reserved. Only training and service purposes

CIRCUIT DIAGRAM

Copyright © 2017 LG Electronics. Inc. All right reserved. Only training and service purposes

< 1-12-1-1-2_xx_ANT > RDK

Rev_0.3

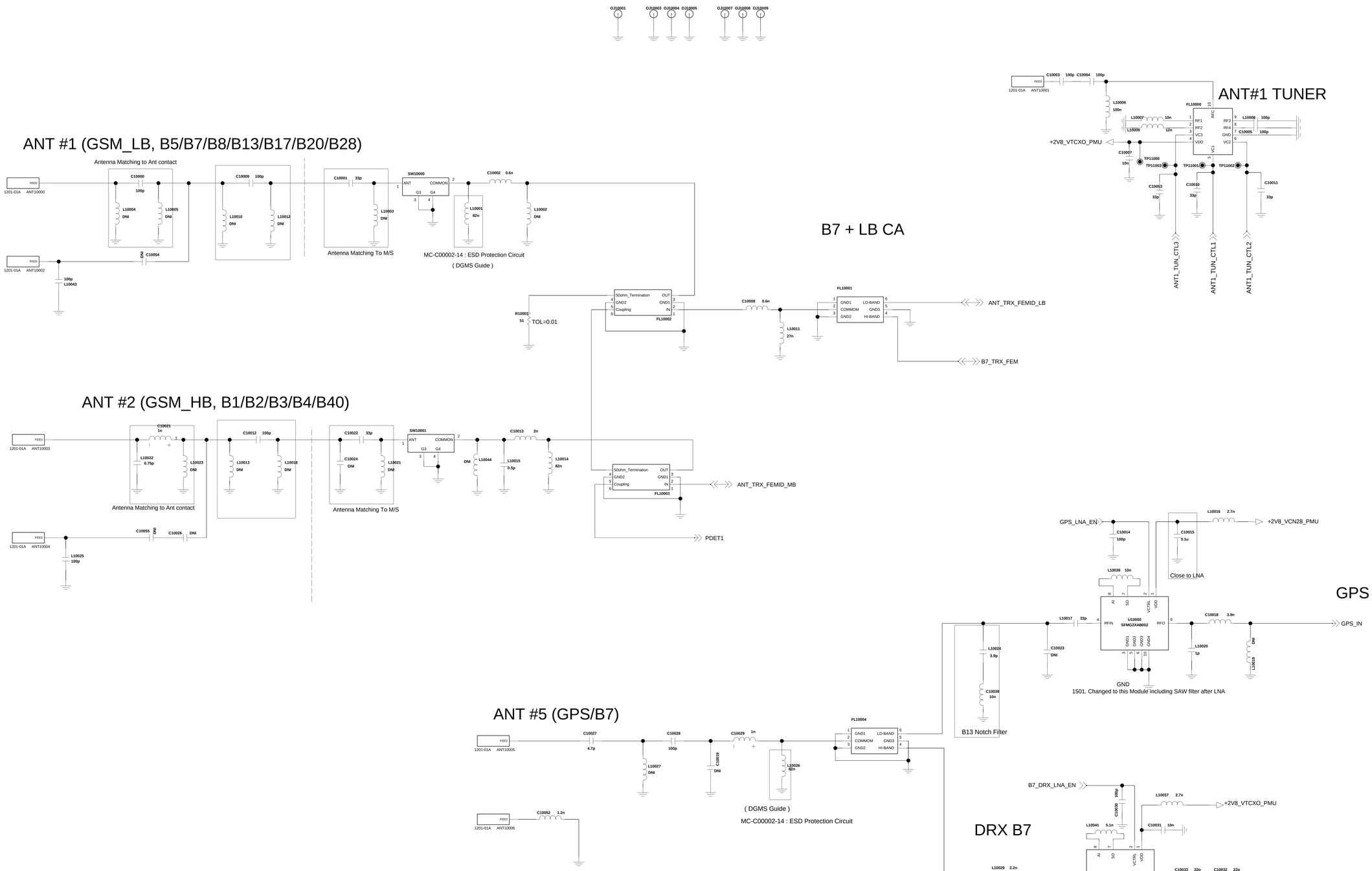

LGE Internal Use Only

LG Electronics	
TITLE	Schematic1
SIZE A2	DWG NO PDM NUMBER
REV Rev	
SHEET 20 of 19	
Drawn by User Name	Date Drawing Date

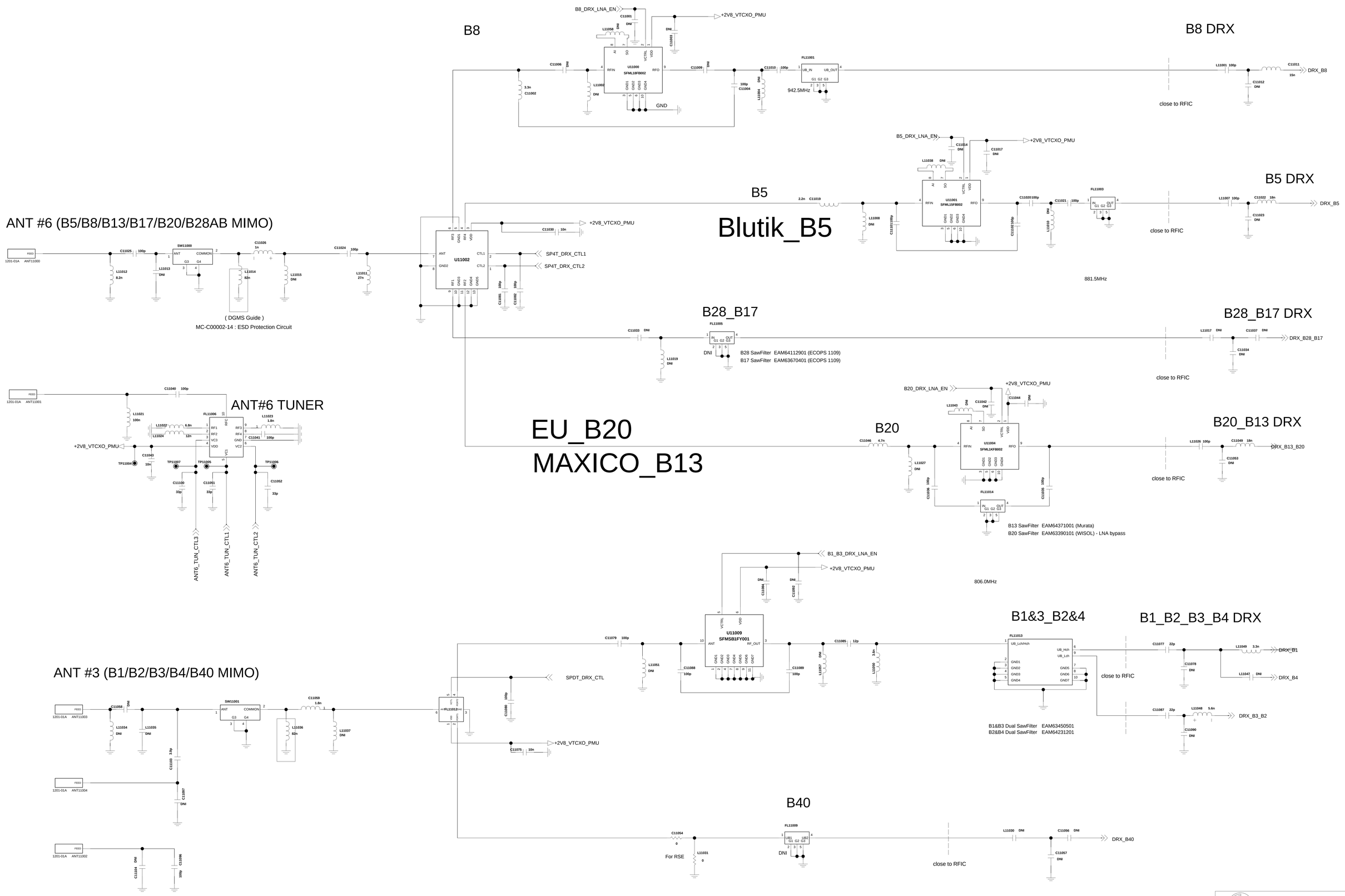

LGE Internal Use Only

uFEMID

º Ï ì Ïçà SAW Front End Module(D5322)
B4/5/8 duplexer EAT63414801
G1800,TX2G LPF

GlobalÇà SAW Front End Module(D5323)
B1/3/5/8 duplexer EAT63375201

FEMID NA P/N : EAT63414801
FEMID EU P/N : EAT63375201

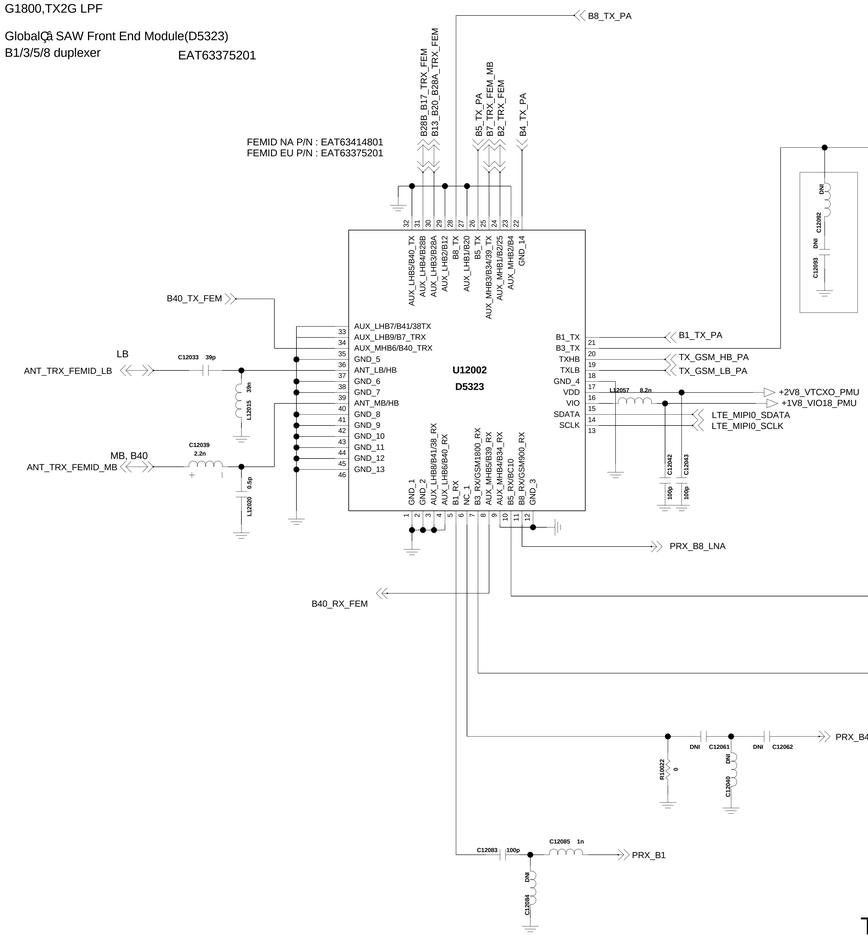

B2 / W1900 / GSM1900

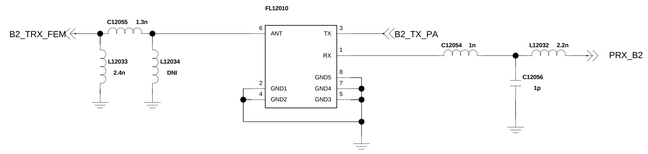

B28B / B17

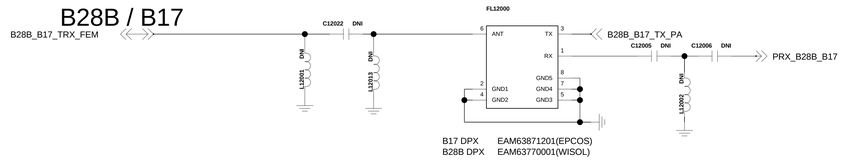

B13 / B20 / B28A

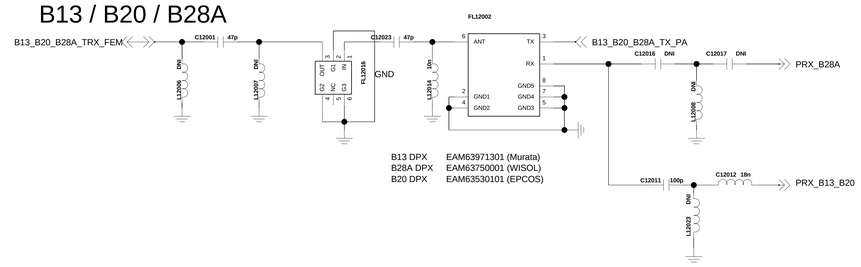

B8, G900 RX

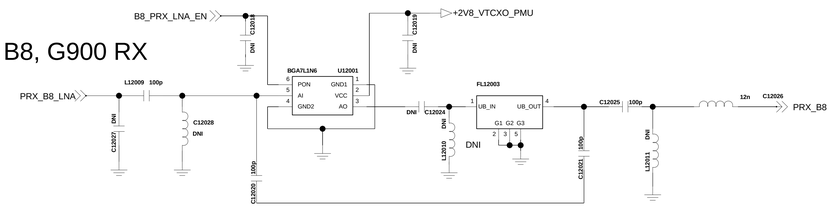

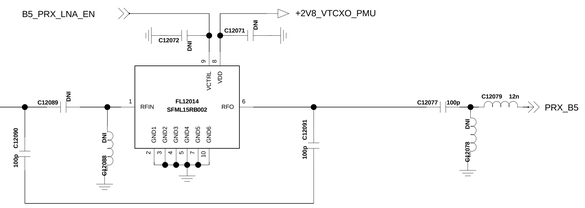

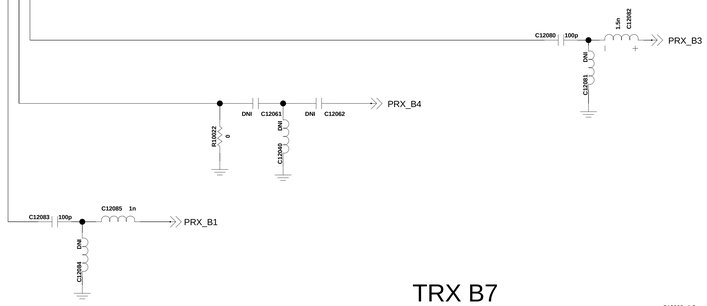

TRX B7

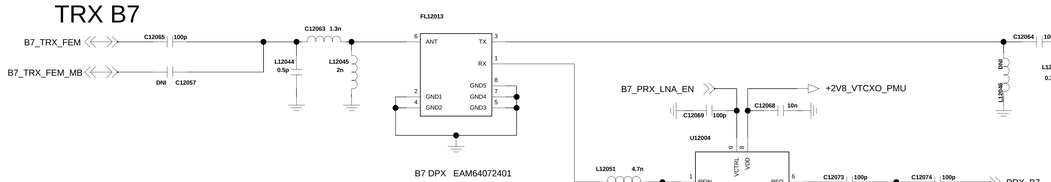

B40 RX

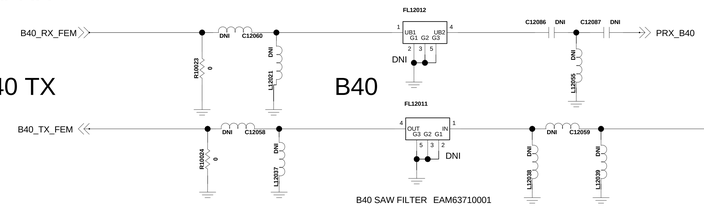

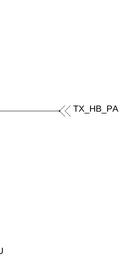

LG Electronics

TITLE: Schematic1

SIZE	DWG NO	REV
A2	PDM NUMBER	Rev

DRAWN BY: User Name | SHEET 24 of 19 | Date: Drawing Date

LGE Internal Use Only

MMPA2.0

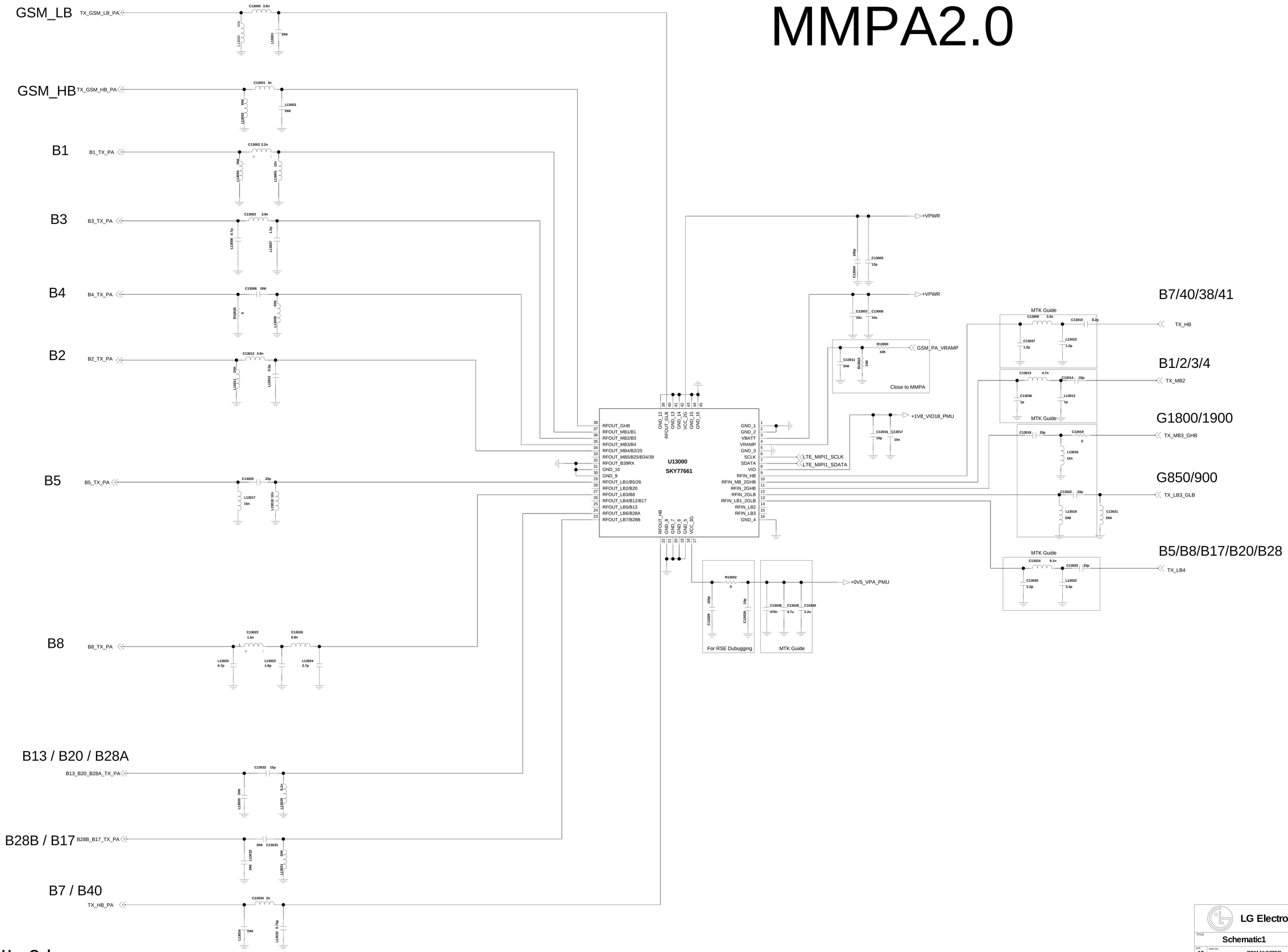

LGE Internal Use Only

LG Electronics

TITLE: Schematic1

SIZE	DWG NO	REV
A2	PDM NUMBER	Rev

Drawn by: User Name | SHEET 25 OF 20 | Date: Drawing Date

< 1-X MT6176 RFIC > RDK

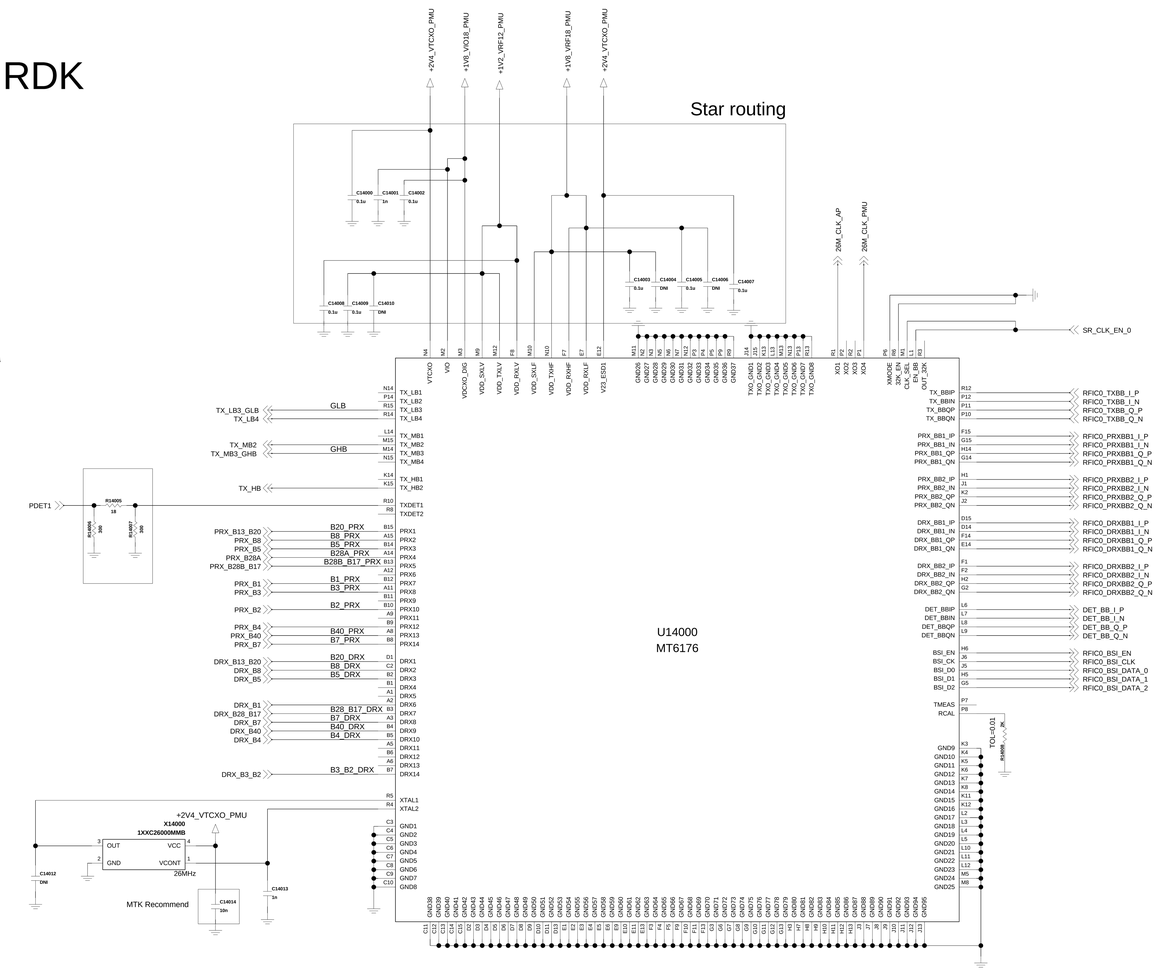

H1,H2 : 7,30,38,40,41
M1,M2,M3,M4 : 1,2,3,4,9,10,11,21,23,24,25,33,34,35,36,37,39/BC 6,1(14),15,4
L1,L2,L3,L4 : 5,6,8,12,13,14,17,18,19,20,16,27,28,44/BC0,10
M3,L3 : 2G : 2,3,5,8

H1,H2 : 2300MHz-2690Mhz
M1,M2,M3,M4 : 1427MHz-2025Mhz
L1,L2,L3,L4 : 699MHz-915Mhz

HB : 7,30,38,40,41
MB : 1,2,3,4,9,10,11,21,23,24,25,33,34,35,36,37,39/BC 6,1(14),15,4
LB : 5,6,8,12,13,14,17,18,19,20,16,27,28,44/BC0,10

PRX14,13,12 : HB,MB 1475MHz-2690Mhz
PRX11,10,9,8 : HB,MB 1475MHz-2690Mhz
PRX7,6,5,4 : MB,LB 709MHz-2170Mhz
PRX3,2,1 : LB 703MHz-960Mhz

LGE Internal Use Only

LG Electronics

Schematic1

SIZE	DWG NO	REV
A2	PDM NUMBER	Rev

DRAWN BY User Name | SHEET 2-1 MT6793DAT4 | DATE Drawing Date

<5-1-1-18_MT6625L_WiFi_BT_GPS_FM>

Rev_0.3

ANT (BT, WiFi)

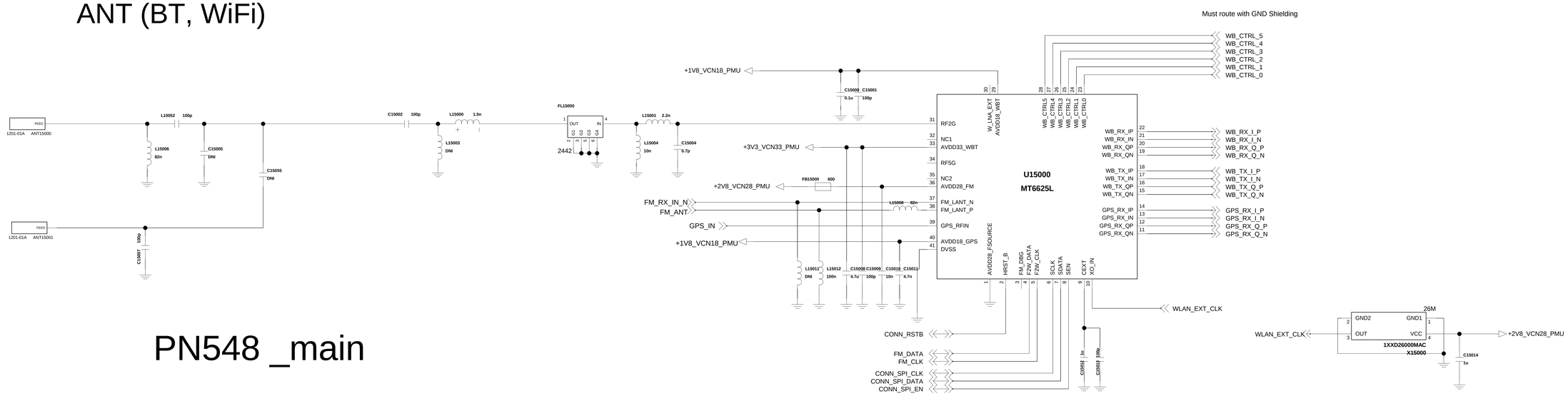

PN548 _main

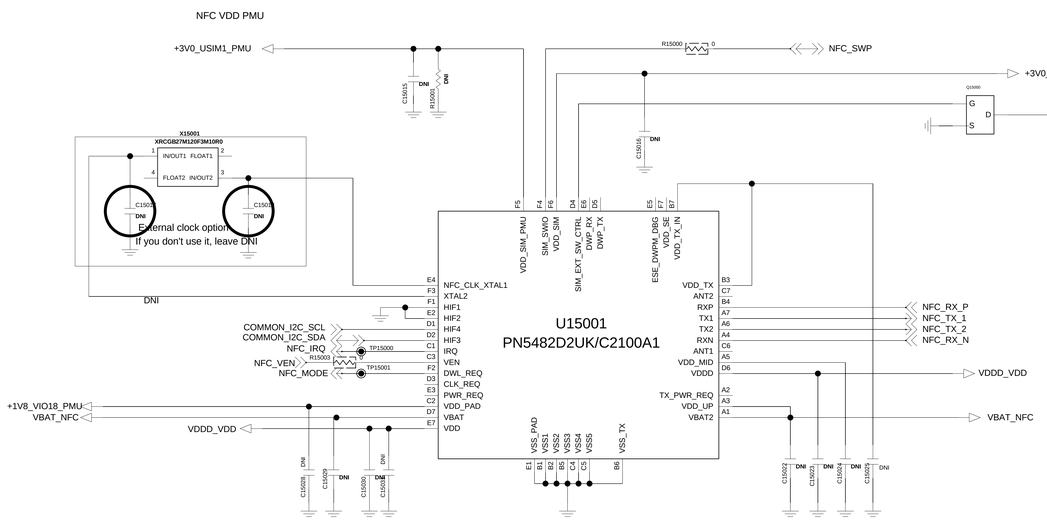

TDMB_1SEG Swap circuit

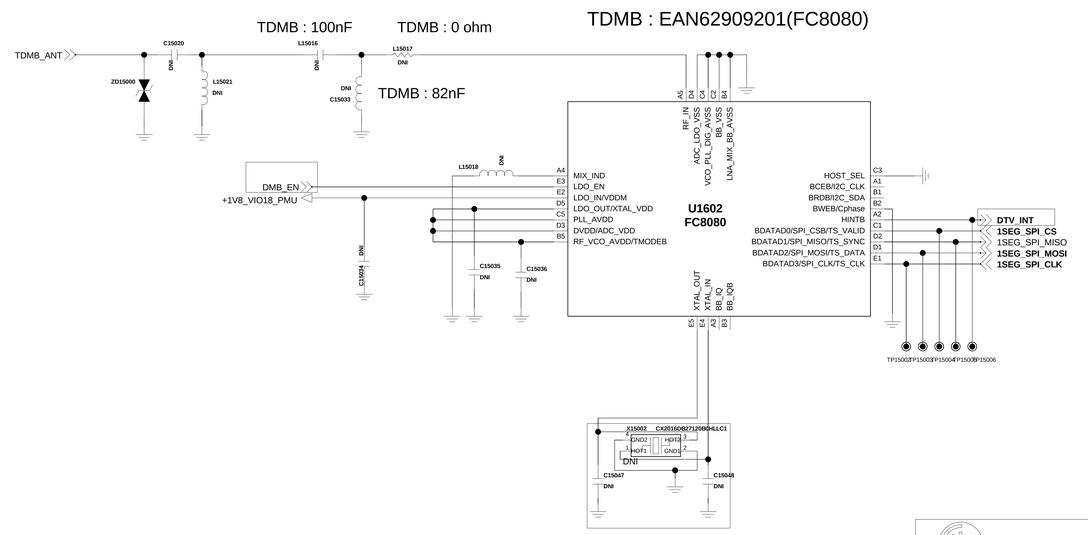

NFC Antenna

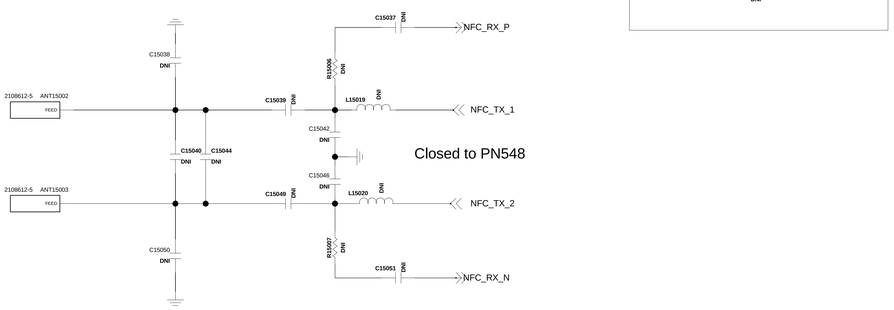

LGE Internal Use Only

LG Electronics	
TITLE	Schematic1
SIZE A2	DWG NO PDM NUMBER
REV Rev	
DRAWN BY User Name	SHEET 26 of 19
Date Drawing Date	

< 2-1_MT6750_DATA >

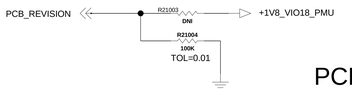

PCB_Revision

0	100K	20K	0.300
0_1	100K	27K	0.383
A	100K	39K	0.505
B	100K	51K	0.608
C	100K	75K	0.771
D	100K	100K	
E	100K	DNI	
1	DNI	100K	QPPS
1.1	100K	200K	

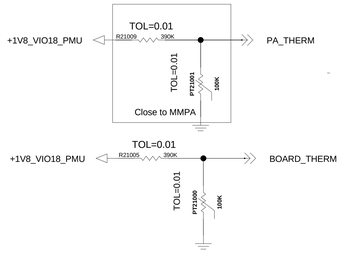

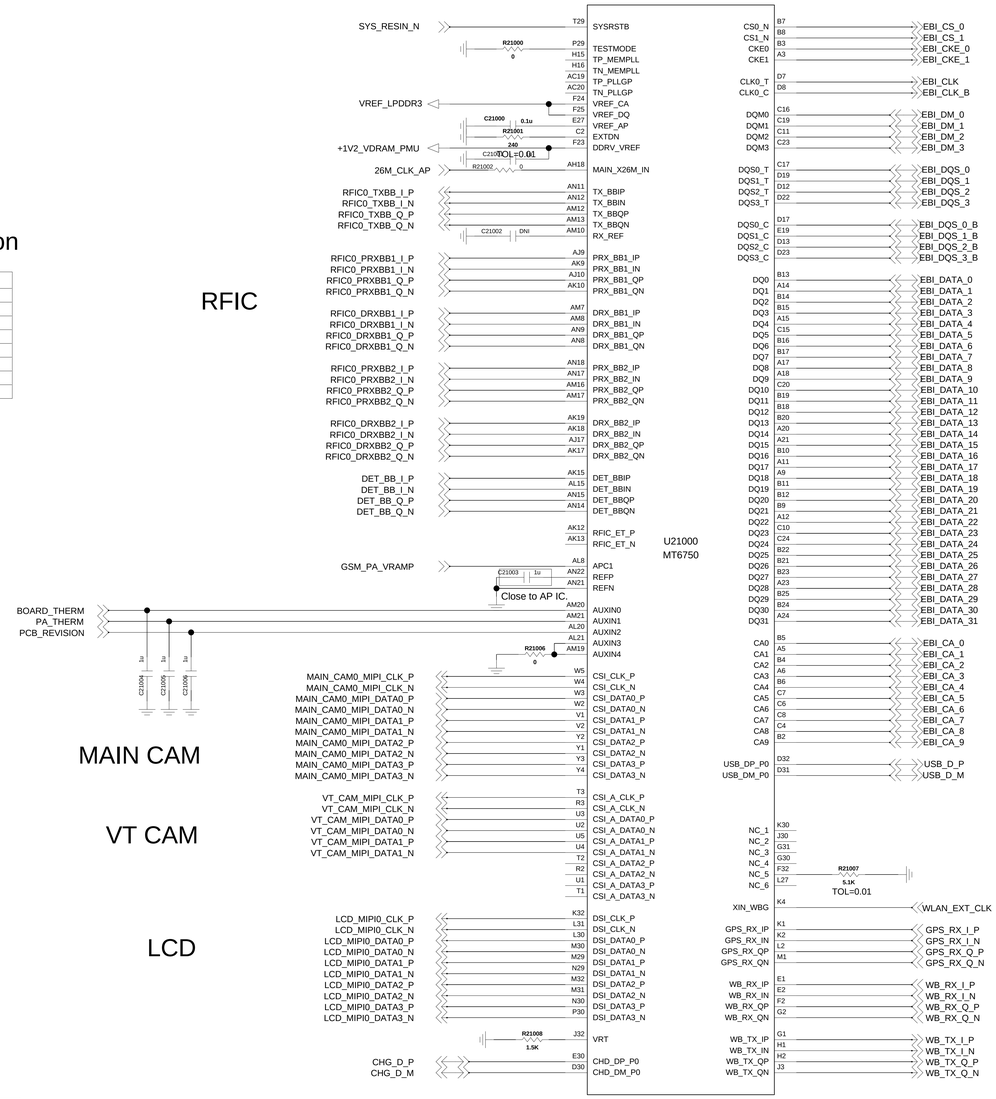

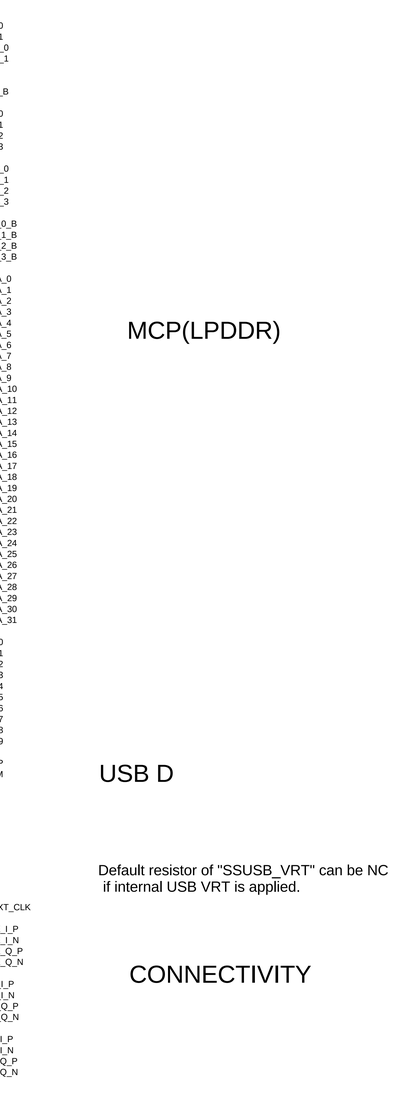

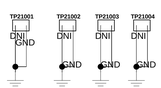

SUS Plate

LGE Internal Use Only

LG Electronics

TITLE: Schematic1		
SIZE: A2	DWG NO: PDM NUMBER	REV: Rev
DRAWN BY: User Name	SHEET: 2-1_MT6750_DATA	Date: Drawing Date

< 2-1_MT6750_GPIO >

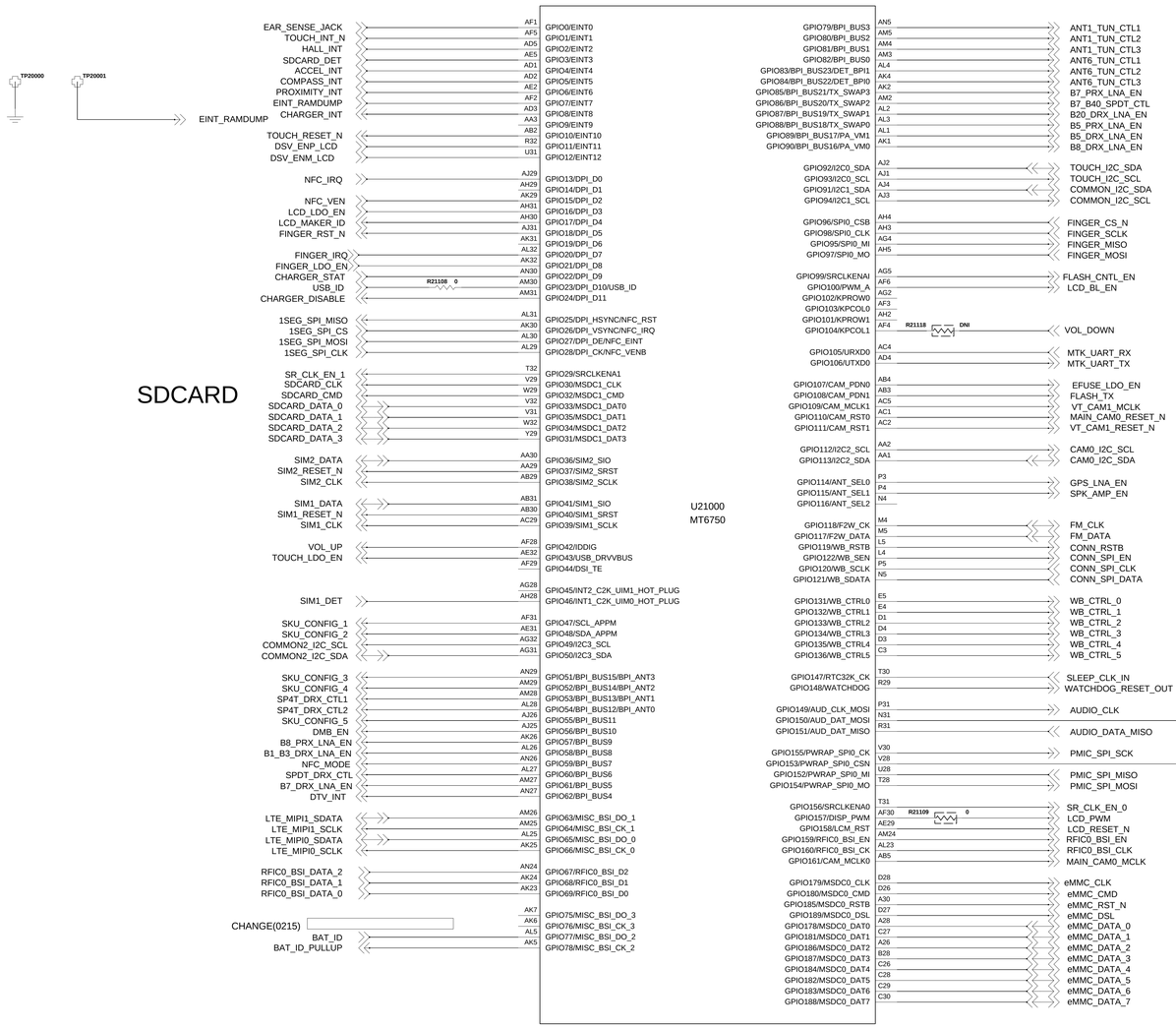

NOTE > PWRAP_SPI0_CSN and AUD_DAT_MOSI are JTAG feature in bootstrap.

eMMC

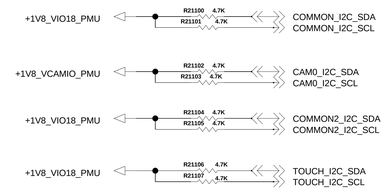

COMMON_I2C : SENSORS , SW CHarger

CAM0_I2C : MAIN / VT CAMERA

COMMON2_I2C : DSV

TOUCH_I2C : TOUCH

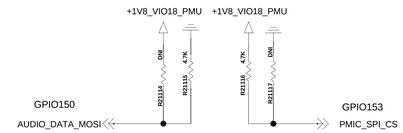

AUDIO_DATA_MOSI	PWRAP_SPI_CS	
LO	HI	N/A
HI	HI	SPI
LO	LO	CAM
HI	LO	MSDC

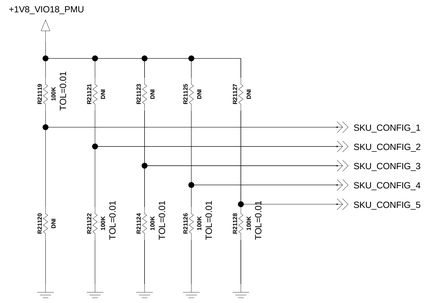

Model	Band	NFC	SIM	GPIO_SUM	GPIO_55	GPIO_52	GPIO_51	GPIO_48	GPIO_47
M250N	1/3/7/8/20	O	SINGLE	0	0	0	0	0	0
M250	1/3/7/8/20	X	DUAL	1	0	0	0	0	1
M250E	1/3/5/7/8/20	X	DUAL	2	0	0	0	1	0
M250ds	3/7/28	X	DUAL	4	0	0	1	0	0
M250YK	1/3/5/7/8/28	X	SINGLE	5	0	0	1	0	1
M250K	1/3/5/7/8/28/40	X	DUAL	7	0	0	1	1	1
M250F	2/4/5/7/28	X	SINGLE	8	0	1	0	0	0
M250AR	2/4/5/7/28	X	SINGLE	9	0	1	0	0	1
M250H	2/4/5/7/13/17	X	SINGLE	10	0	1	0	1	0
M250I	1/3/5/8/40	X	DUAL	11	0	1	0	1	1
M250dsn	1/3/7/8/40	O	DUAL	12	0	1	1	0	0
K-M121 L	1/3/7/8/17	O	SINGLE	13	0	1	1	0	0
K-M121 S	1/3/7/8/17	O	SINGLE	14	0	1	1	0	0
K-M121 K	1/3/7/8/17	O	SINGLE	15	0	1	1	0	0
M250Y	1/3/5/7/8	X	SINGLE	18	1	0	0	1	0

LG Electronics

TITLE: Schematic1

SIZE: A2 | DWG NO: PDM NUMBER | REV: Rev

DRAWN BY: User Name | SHEET 25 OF 19 | Date: Drawing Date

LGE Internal Use Only

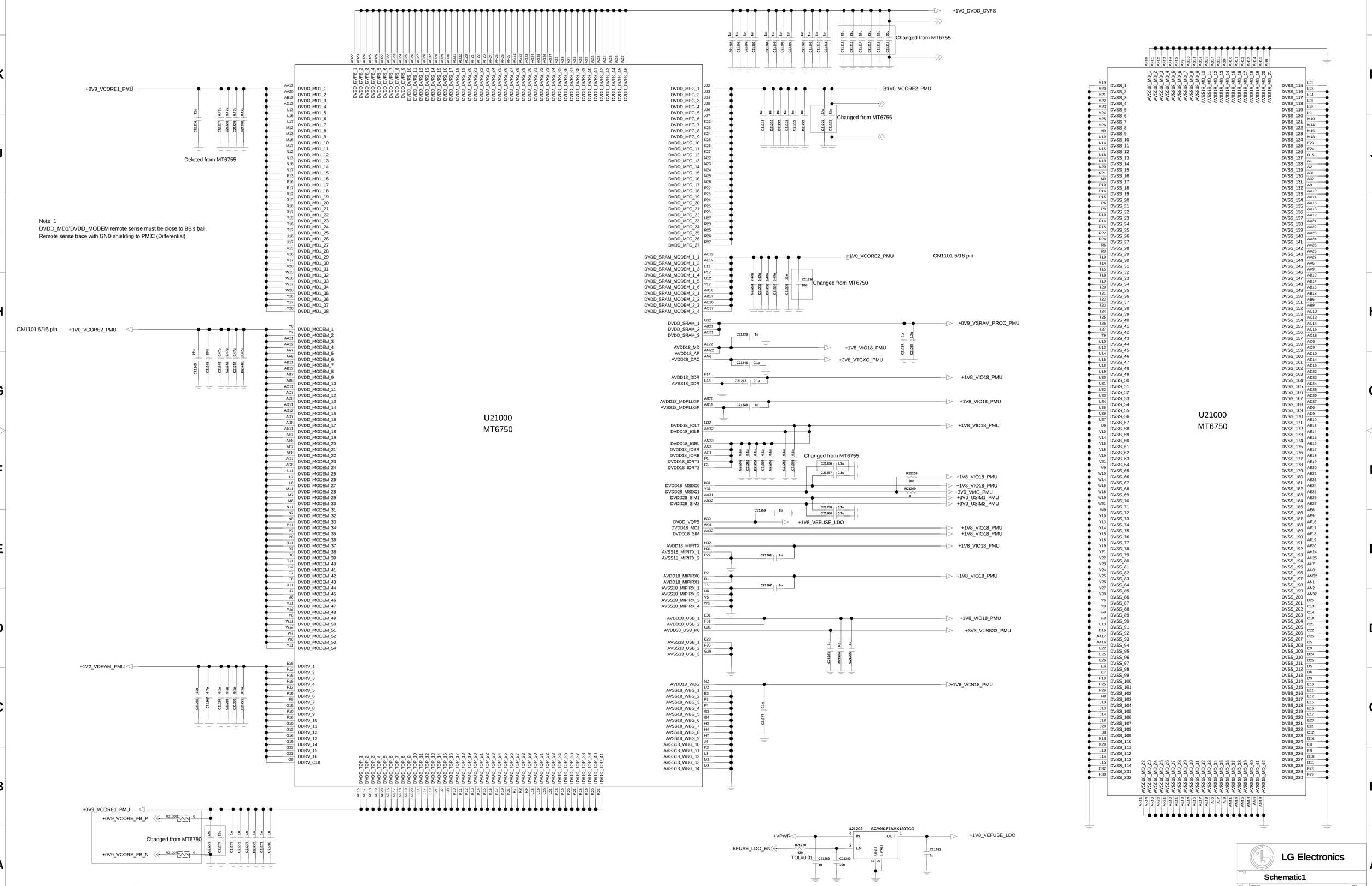

LGE Internal Use Only

LG Electronics

Schematic1

A2 | PDM NUMBER | Rev

User Name | 2-1_MT6750_POWER_GND | Drawing Date

103

< MCP_eMMC_5_0_16Gb_DDR3_16GB_eMMC Hynix >

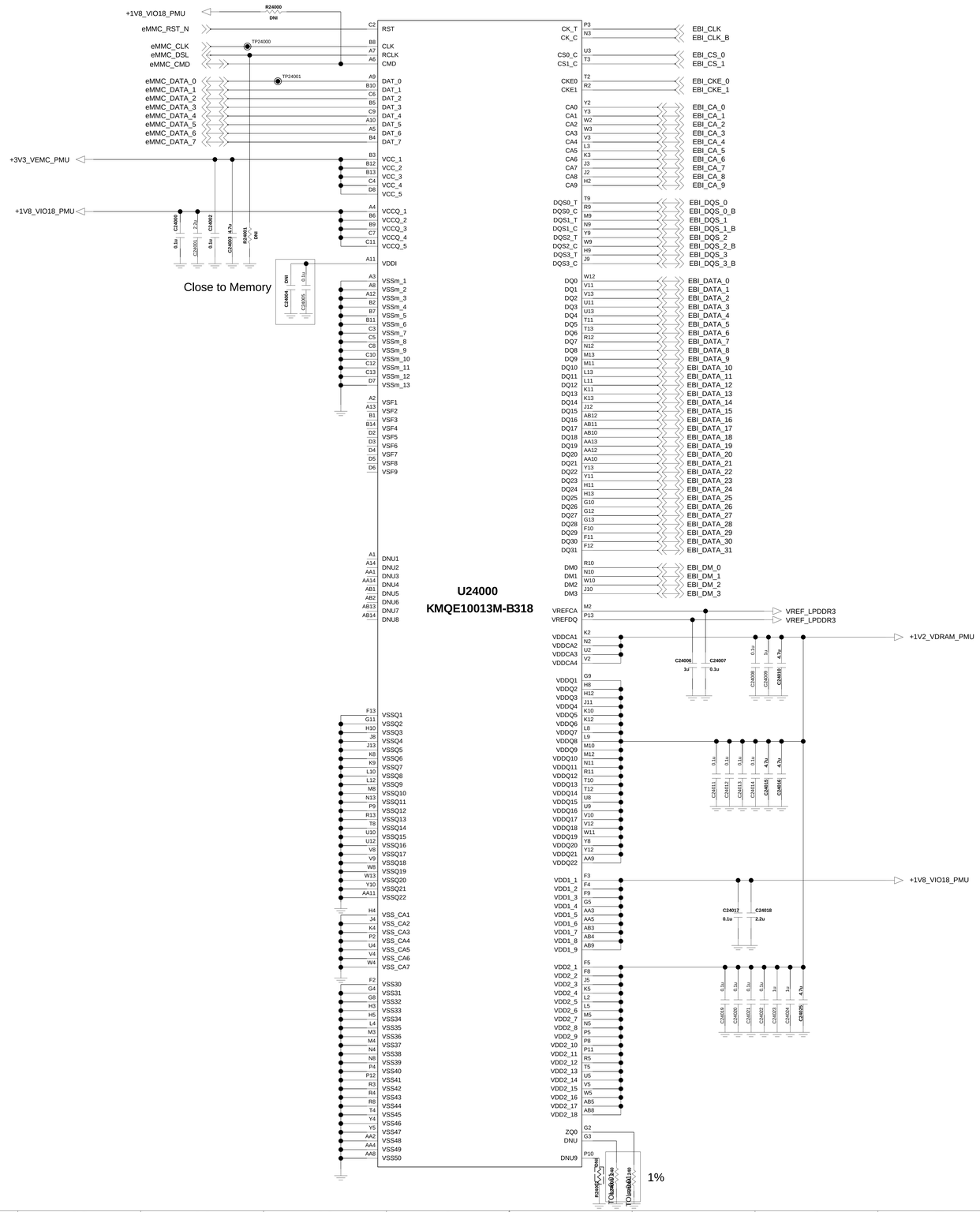

LGE Internal Use Only

LG Electronics	
TITLE	Schematic1
SIZE A2	DWG NO PDM NUMBER
REV Rev	
SHEET 3-3_MCP_eMMC_5_0_16Gb_DDR3_16GB_HYNIX	
DRAWN BY User Name	

<4-1-15-1_PMIC_MT6353_DATA >

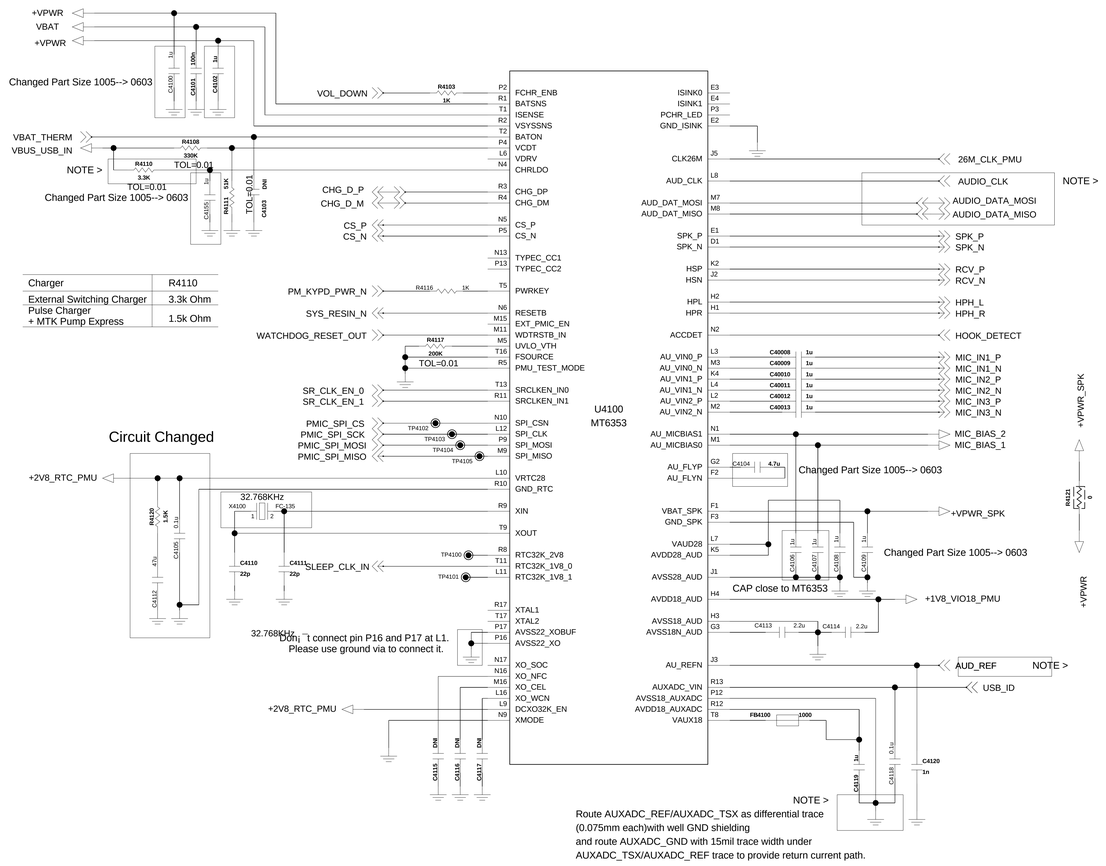

Charger	R4110
External Switching Charger	3.3k Ohm
Pulse Charger + MTK Pump Express	1.5k Ohm

<4-1-15-1_PMIC_MT6353_POWER > Rev_0.1

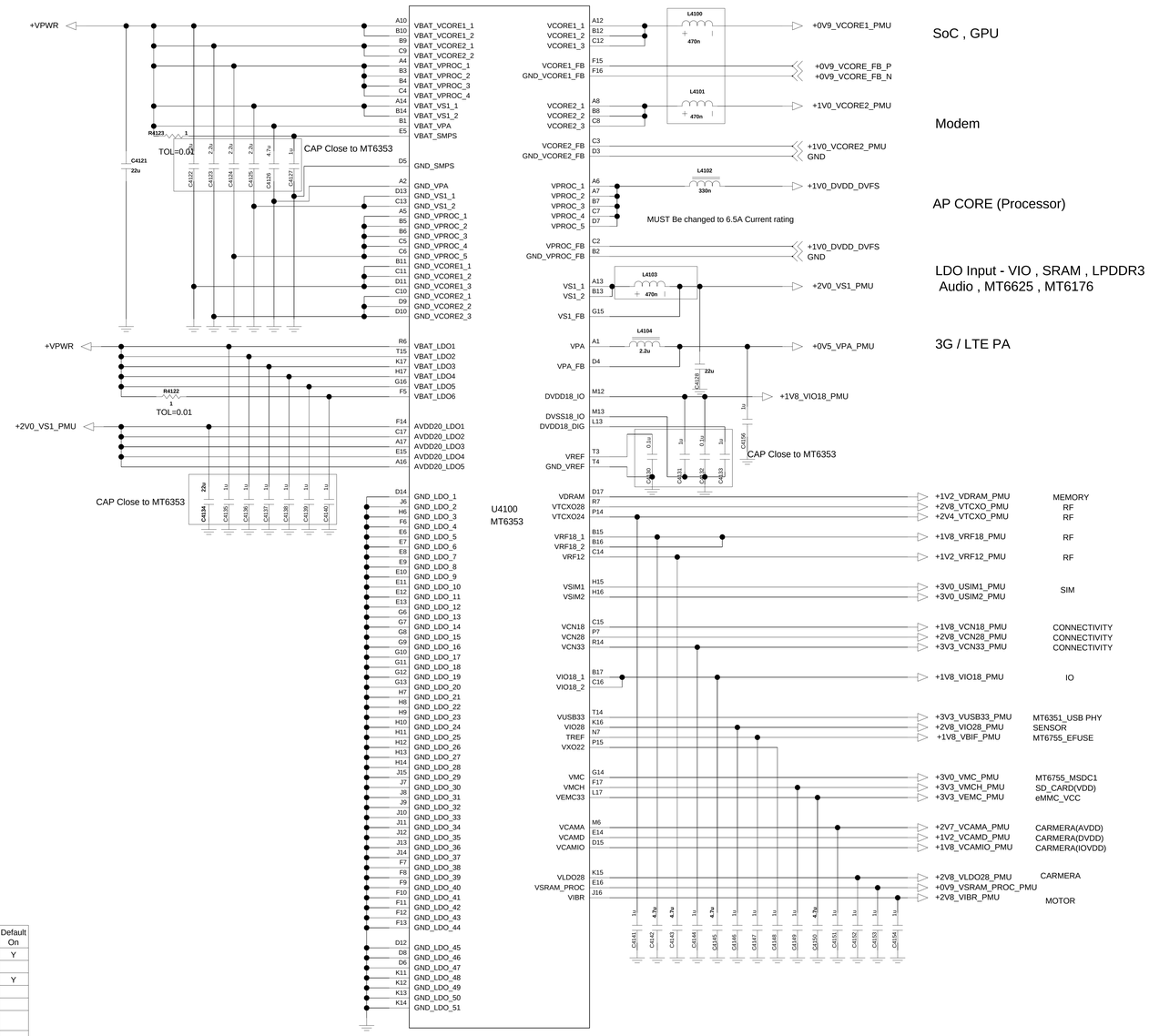

BUCK & LDO

Function	Default Voltage	Vout	Voltage Step [mV]	Rated Current	Default On
VCORE1	0.9V	0.600 - 1.310 V	6.25	3,000mA	Y
VCORE2	1.0V	0.600 - 1.310 V	6.25	3,500mA	Y
VPROC	1.0V	0.600 - 1.310 V	6.25	5,000mA	Y
VS1	2.0V	1.950 - 2.200 V	12.5	1,900mA	Y
VPA	0.5V	0.500 - 3.400 V	50	800mA	N

Function	Type	Input Power Domain	Default Voltage	Vout	Rated Current	Default On
VDRAM	SLDO	AVDD20_LDO1	1.24 V	1.24 V	1,000mA	Y
VTCXO28	ALDO	VBAT_LDOS1	2.8 V	2.8 V	40mA	
VTCXO24	ALDO	VBAT_LDOS2	2.375 V	2.375 V	40mA	Y
VRF18	SLDO	AVDD20_LDO5	1.825 V	1.825 V	400mA	
VRF12	SLDO	AVDD20_LDO5	1.2 V	1.2 V	150mA	
VSIM1	DLDO	VBAT_LDO4	1.8 V	1.7 / 1.8 / 1.86 / 2.76 / 3.0 / 3.1 V	50mA	
VSIM2	DLDO	VBAT_LDO4	1.8 V	1.7 / 1.8 / 1.86 / 2.76 / 3.0 / 3.1 V	50mA	
VCN18	SLDO	AVDD20_LDO2	1.8 V	1.8 V	150mA	
VCN28	ALDO	VBAT_LDO1	2.8 V	2.8 V	40mA	
VCN33	DLDO	VBAT_LDO2	3.3 V	3.3 / 3.4 / 3.5 / 3.6 V	350mA	
VIO18	SLDO	AVDD20_LDO3	1.8 V	1.8 V	600mA	Y
VUSB33	DLDO	VBAT_LDO2	3.3 V	3.3 V	50mA	Y
VIO28	DLDO	VBAT_LDO4	2.8 V	2.8 V	200mA	Y
VREF	Power Switch	VBAT_LDO1	1.8 V	1.8 V	1mA	
VXO22	ALDO	VBAT_LDOS2	2.2 V	2.2 V	20mA	Y
VMC	DLDO	VBAT_LDO5	3.0 V	1.8 / 2.9 / 3.0 / 3.3 V	200mA	
VMCH	DLDO	VBAT_LDO5	3.0 V	2.9 / 3.0 / 3.3 V	800mA	
VEMC33	DLDO	VBAT_LDO3	3.0 V	2.9 / 3.0 / 3.3 V	800mA	Y
VCAMA	ALDO	VBAT_LDO1	2.8 V	2.5 / 2.8 V	200mA	
VCAMD	SLDO	AVDD20_LDO2	1.3 V	0.9 / 1.0 / 1.1 / 1.22 1.3 / 1.5 / 1.8 V	<=1.5V : 500mA 1.8V : 300mA	
VCAMIO	SLDO	AVDD20_LDO2	1.8 V	1.8 V	200mA	
VLDO28	DLDO	VBAT_LDO4	2.8 V	2.8 V	300mA	
VSRAM_PROC	SLDO	AVDD20_LDO4	1.1 V	0.6 - 1.31 V	400mA	Y
VIBR	DLDO	VBAT_LDO4	2.8 V	1.2 / 1.3 / 1.5 / 1.8 2.5 / 2.8 / 3.0 / 3.3 V	100mA	
VAUX18	ALDO	VBAT_LDO1	1.8 V	1.8 V	40mA	Y
VAUD28	ALDO	VBAT_LDO1	2.8 V	2.8 V	40mA	Y
VRTC28	VRTC28	VBAT_LDO1	2.8 V	2.8 V	2mA	Y
VDIG18	DVDD18_DIG	VBAT_LDO2	1.8 V	1.8 V	20mA	Y

LGE Internal Use Only

LG Electronics

TITLE: Schematic1

SIZE	DWG NO	REV
A2	PDM NUMBER	Rev

SHEET 20 of 20 | DRAWN BY: User Name | Date: Drawing Date

< 6-6-1_Earjack >

Analog S/W

Earjack amp-off popup noise

Deleted (VI 6/30)

Deleted with
HPH_AUD_SW
(MT6750 GPIO_19)

	U6602	C6611	C6615	C6612	C6613
TDMB & FM	O	O	X	O	X
Only TDMB	X	O	O	X	X
Only FM	X	X	X	O	O
None	X	X	X	X	X

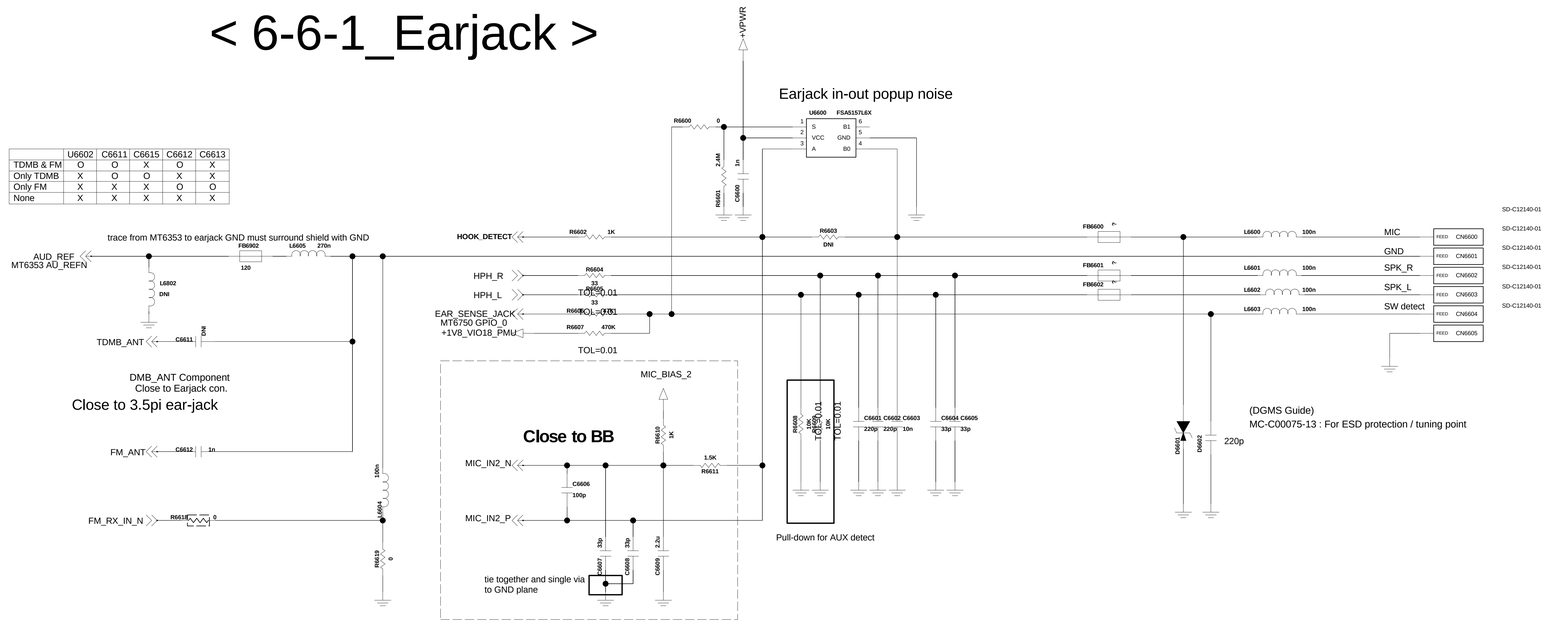

SPK_AMP

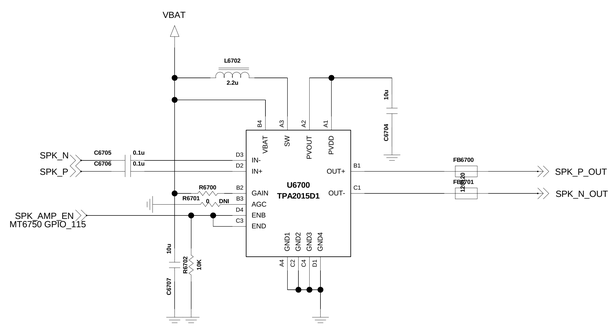

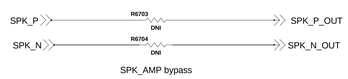

< 6-7-1_Speaker >

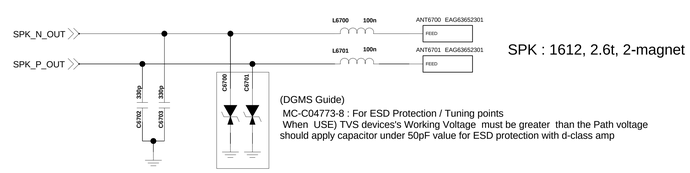

< 6-8-2_Receiver >

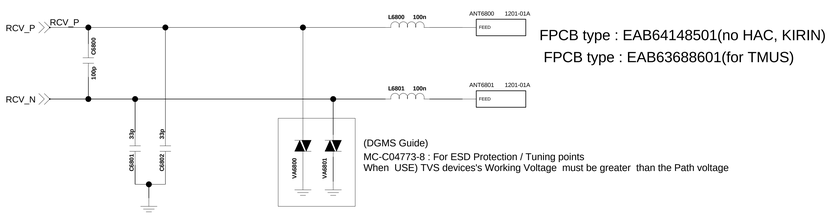

< 6-9-2_2MIC >

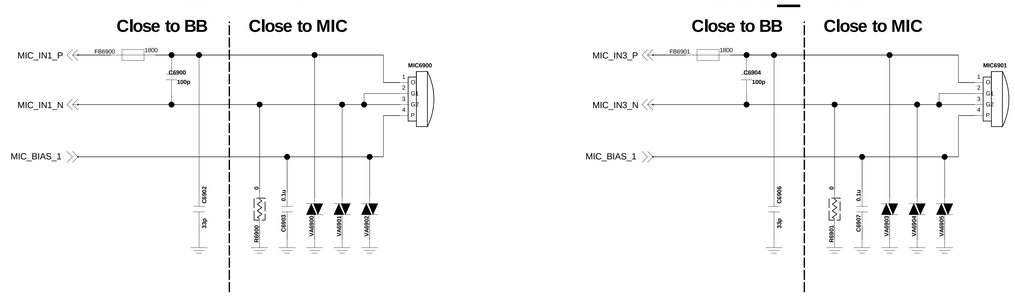

LGE Internal Use Only

LG Electronics

Schematic1

A2 | PDM NUMBER | Rev

6-6_EARJACK | User Name | Drawing Date

< 7-1-X_LCD_LGD_HD >

LGD 5.3 inch HD Incell Hybrid LCD

HD LCD module : EAT63355101

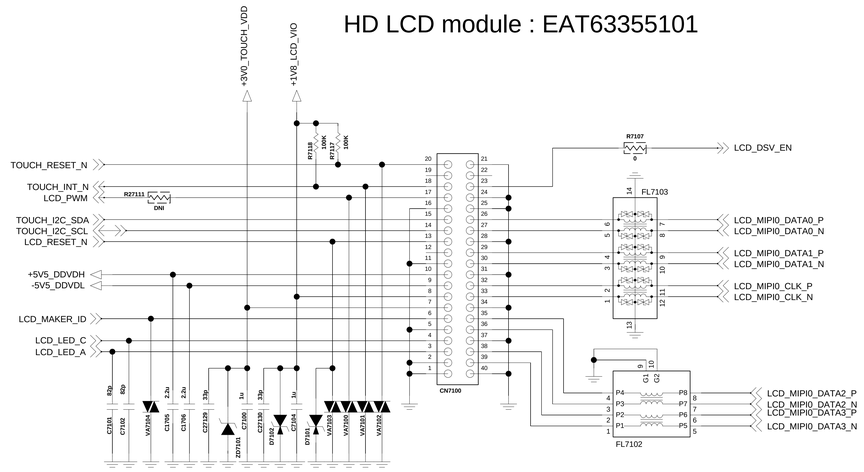

<7-3-5-1_30pin_5M_8M_13M_AF> Rev_0.3

13 Mega Camera module : EBP63001801

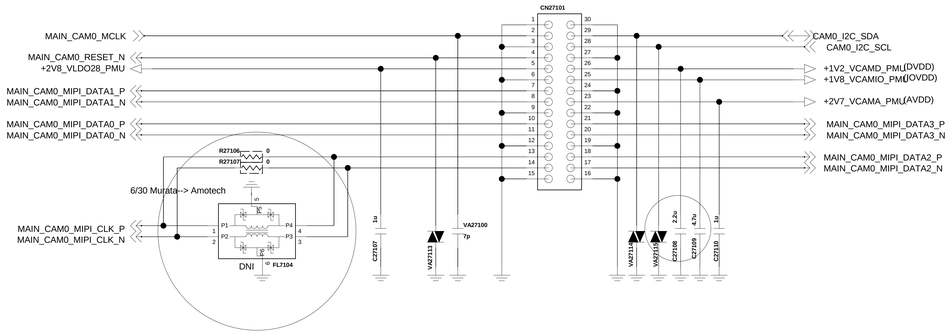

LCD_Backlight_Flash_DSV_LM3632

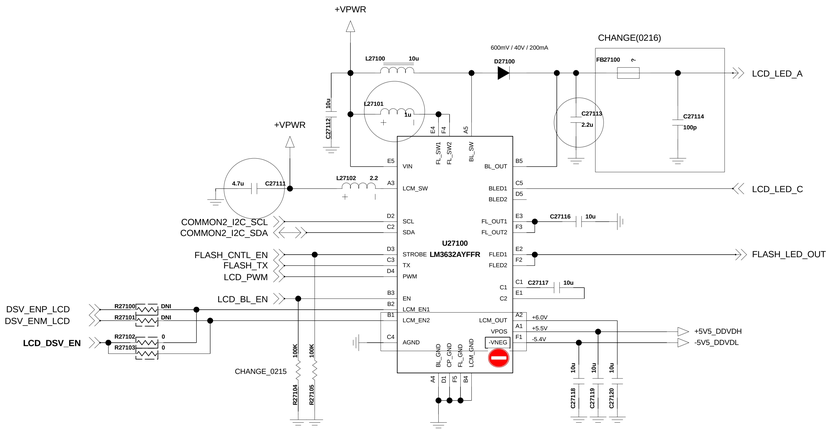

I2C Address : 0000000 or 0000001

<Flash_LED>

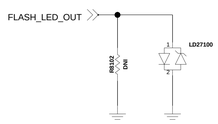

< 7-4-x_Front_Camera_30pin_5M_FF>

[DGMS Guide]

MC-C00081-17: 1. Add ESD Protection curcuit for Camera signal lines

5M_Wide : EBP62982701(LGIT)

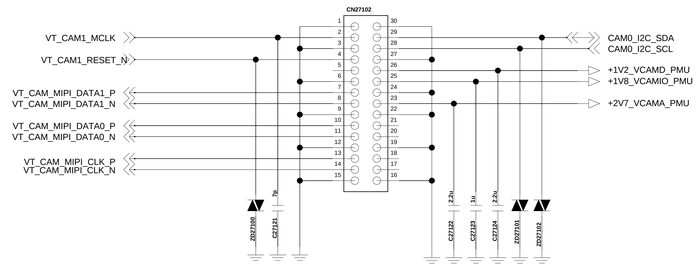

TOUCH LDO

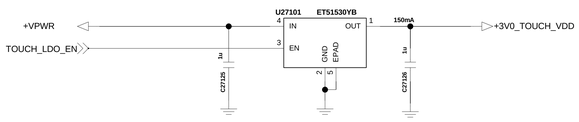

LCD LDO

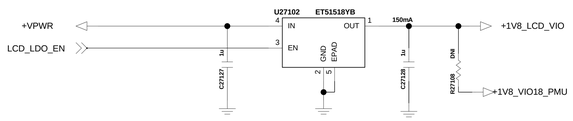

Accel_Compass LSM303B

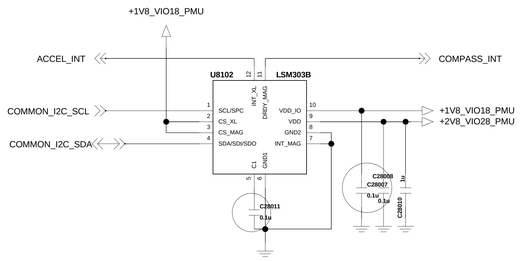

6-AXIS(OPTION DNI)

Proximity_apds9930-130

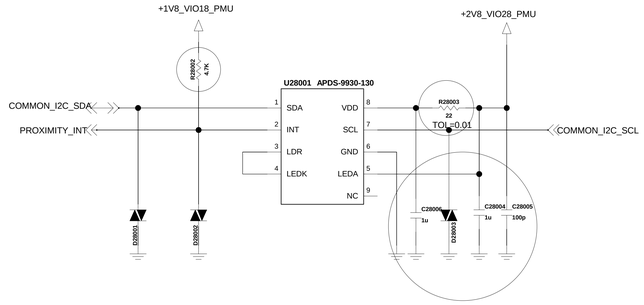

FINGER LDO

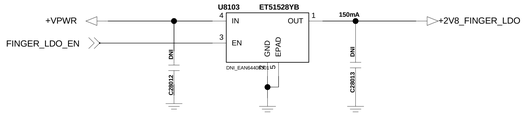

< 8-7-1-5_Hall_IC_S5712>

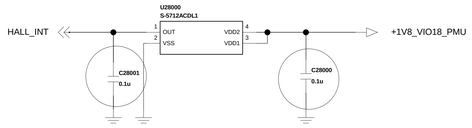

< 9-9-1-1_MOTOR >

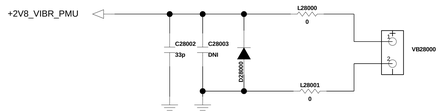

< FINGER KEY >

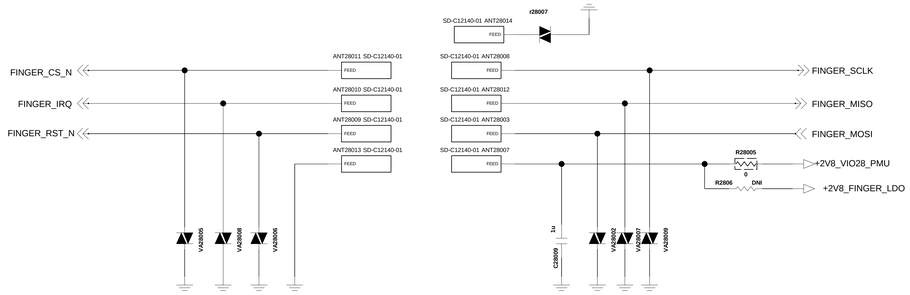

< PWR KEY >

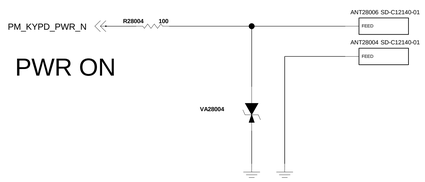

PWR ON

< VOL KEY >

Vol. UP/DOWN

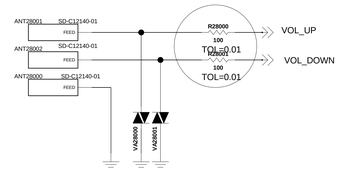

LGE Internal Use Only

LG Electronics

TITLE	Schematic1
SIZE	A2
DWG NO	PDM NUMBER
REV	Rev
DRAWN BY	User Name
SHEET	8_Sensor_VIB_KEY
Date	Drawing Date

<9-1_Battery_Connector_4Pin>

Circuit 1. Batt Conn. /wo EMI Filter

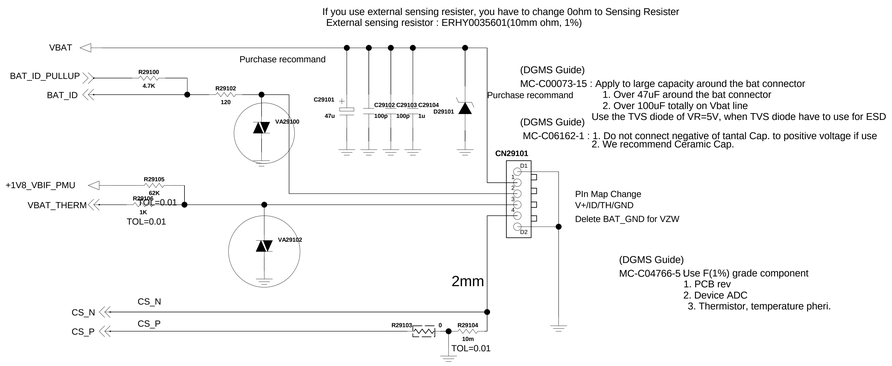

<9-2-1_USB_IO> Rev.1.0

Connector 1. USB 2.0

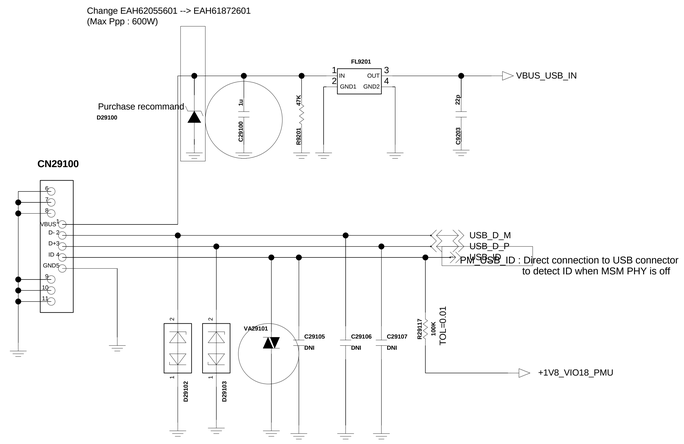

< RT9460_SWITCH CHARGER >

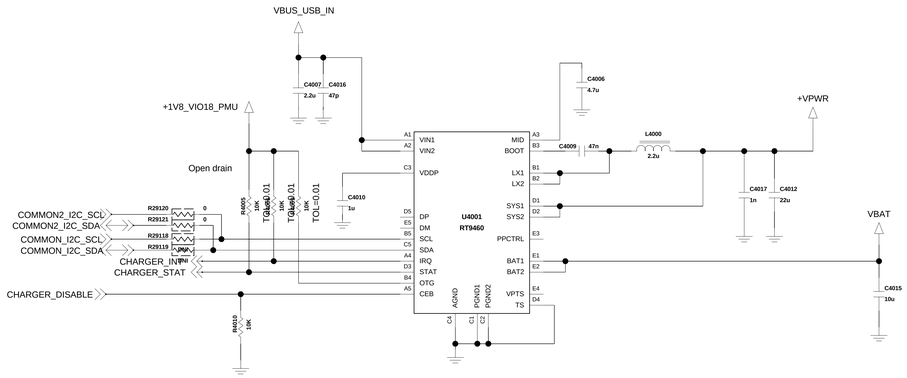

** NOTE4

PSEL High : USB host source Low : adapter source

STAT Low : charge in progress High : complete

OTG : PSEL HIGH & OTG HIGH IIN LIMIT 500mA OTG LOW IIN LIMIT 100mA

ILIM : set the maximum input current limit

--> min 500mA , (1/R)*530 = about 2.2A

LGE Internal Use Only

LG Electronics	
TITLE	MSM8926_X5_VZW
SIZE A2	DWG NO PDM NUMBER
REV Rev	
Drawn by User Name	SHEET 50 OF 38
Date Drawing Date	

< 9-6_u_SDCARD_Socket > Rev.1.1

Circuit 1. u-SDCARD SIM Combo for QMC /w Low Detection

Note 1. +2V95_SD_PULL_UP (1.8 or 2.95V) switches automatically per inserted SD Card version
For example, SD card Version 2.0 = 2.95V, Version 3.0 = 1.8V
Note 2. +2V95_SD_VCC is SD/MMC Power

Caution ! - According to MSM8960, APQ8064 BackPowering issue, +2V95_SD_PULL_UP was Always on during sleep mode.

	SW	VSS(T6)	SD_CARD_DET
Card Detect			
Card Installed			GND
Card Not Installed			1.8V

Added for NFC

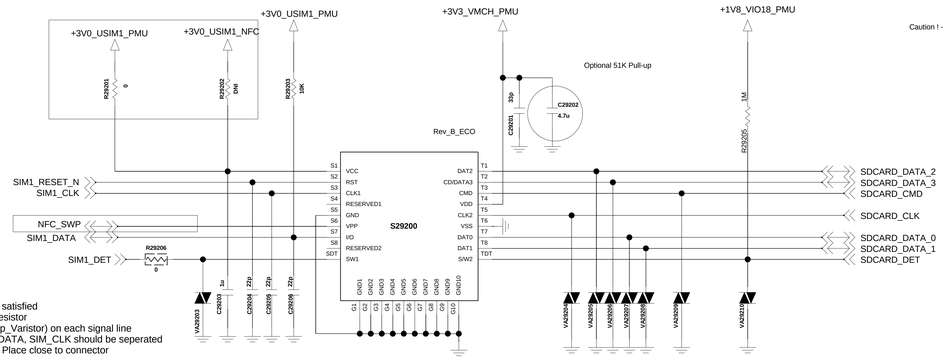

Nano SIM Combo Socket

(DGMS Guide)
MC-C04581-13 : Below items should be satisfied
1. SIM_DATA pull-up resistor
2. Use under 33pF (Cap_Varistor) on each signal line
3. When routing, SIM_DATA, SIM_CLK should be seperated
4. CAP,Varistor should Place close to connector

(DGMS Guide)
MC-C04582-14 : Below items should be satisfied
1. SD_DETECT Pull-up or Pull-down
2. Data/CMD line should be needed Pull-up resistor
(If chipset has internal Pull-up, comment it on circuit)
3. Use under total 10pF Capacitance on each line ; Data [0:3], CMD - Cap. TVS diode, varistor
(on other line, We recommend 10pF capacitance and use under 30pF capacitance)
4. CAP,Varistor should Place close to connector

(DGMS Guide)
MC-C05446-7 : Below items should be satisfied
1. Power of SD card should use independant Power source just like LDO/PMIC which can turn off it.
2. Per chip type which support SD card should manage current capacity.
(In case of High speed mode, SD Card Power should get margin of 200mA)
3. Do not connect serial component to SD card power, voltage drop can arise at Power line.

However, It is possible for MSM8974, MSM8x10 .. to be turned off, so, FET circuit to turn off it is not needed any more.

However, It is possible for MSM8974, MSM8x10 :: to be turned off, so, FET circuit to turn off it is not needed any more.

TOP SHIELD CAN CLIP

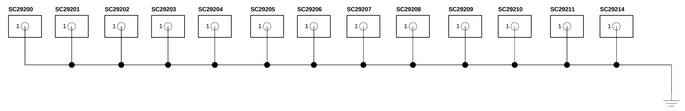

TOP_GND_CONTACT_CLIP

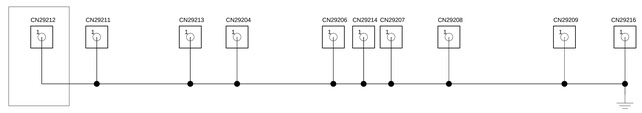

Bottom_Shieldcan2

Single SIM Shield Can : MBK64892905
Dual SIM Shield Can : MBK64892906

Bottom_Shieldcan3

< 9-3-1_JTAG > Rev_0.4

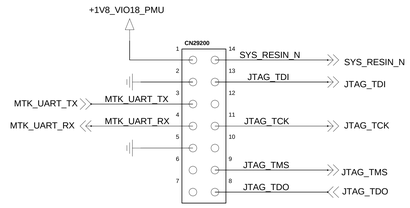

Domestic EU_Global

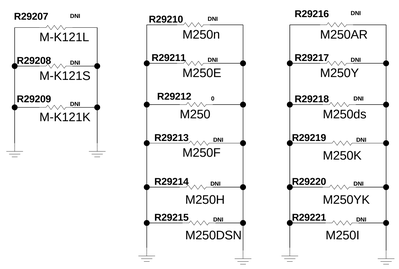

Model Index

	K121L	K121S	K121K	M250n	M250E	M250	M250F	M250H	M250DSN	M250AR	M250Y	M250ds	M250K	M250YK	M250I
R29207	0 Ohm	DNI	DNI	DNI	DNI	DNI	DNI	DNI	DNI	DNI	DNI	DNI	DNI	DNI	DNI
R29208	DNI	0 Ohm	DNI	DNI	DNI	DNI	DNI	DNI	DNI	DNI	DNI	DNI	DNI	DNI	DNI
R29209	DNI	DNI	0 Ohm	DNI	DNI	DNI	DNI	DNI	DNI	DNI	DNI	DNI	DNI	DNI	DNI
R29210	DNI	DNI	DNI	0 Ohm	DNI	DNI	DNI	DNI	DNI	DNI	DNI	DNI	DNI	DNI	DNI
R29211	DNI	DNI	DNI	DNI	0 Ohm	DNI	DNI	DNI	DNI	DNI	DNI	DNI	DNI	DNI	DNI
R29212	DNI	DNI	DNI	DNI	DNI	0 Ohm	DNI	DNI	DNI	DNI	DNI	DNI	DNI	DNI	DNI
R29213	DNI	DNI	DNI	DNI	DNI	DNI	0 Ohm	DNI	DNI	DNI	DNI	DNI	DNI	DNI	DNI
R29214	DNI	DNI	DNI	DNI	DNI	DNI	DNI	0 Ohm	DNI	DNI	DNI	DNI	DNI	DNI	DNI
R29215	DNI	DNI	DNI	DNI	DNI	DNI	DNI	DNI	0 Ohm	DNI	DNI	DNI	DNI	DNI	DNI
R29216	DNI	DNI	DNI	DNI	DNI	DNI	DNI	DNI	DNI	0 Ohm	DNI	DNI	DNI	DNI	DNI
R29217	DNI	DNI	DNI	DNI	DNI	DNI	DNI	DNI	DNI	DNI	0 Ohm	DNI	DNI	DNI	DNI
R29218	DNI	DNI	DNI	DNI	DNI	DNI	DNI	DNI	DNI	DNI	DNI	0 Ohm	DNI	DNI	DNI
R29219	DNI	DNI	DNI	DNI	DNI	DNI	DNI	DNI	DNI	DNI	DNI	DNI	0 Ohm	DNI	DNI
R29220	DNI	DNI	DNI	DNI	DNI	DNI	DNI	DNI	DNI	DNI	DNI	DNI	DNI	0 Ohm	DNI
R29221	DNI	DNI	DNI	DNI	DNI	DNI	DNI	DNI	DNI	DNI	DNI	DNI	DNI	DNI	0 Ohm

Added for EU_Global

Dual Nano SIM

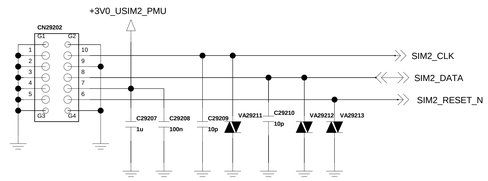

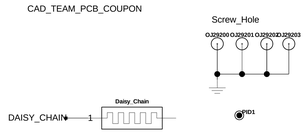

LGE Internal Use Only

LG Electronics
TITLE: MODEL NAME
SIZE: A2 | DWG NO: PDM NUMBER | REV: Rev
Drawn by: User Name | SHEET 1 OF 2 | Date: Drawing Date

U2100_MT6750_IC,Digital Baseband Processor(Top View)

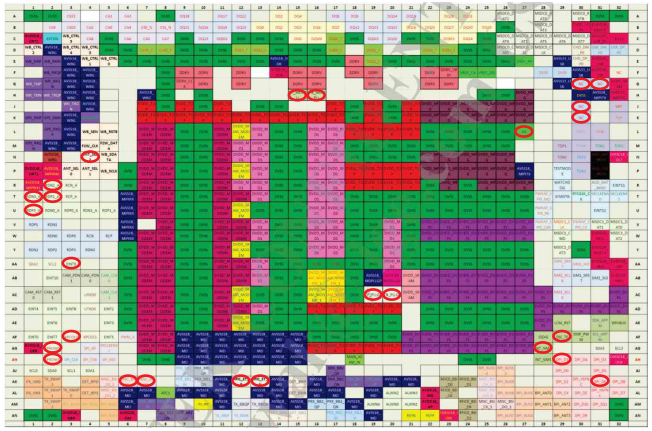

O Not used

U24000_KMQE10013M-B318,IC,MCP.eMMC(Top View)

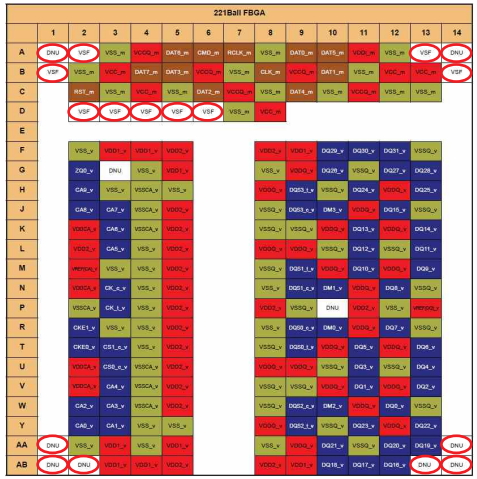

O Not used

U4100_MT6353_IC,PMIC (Top View)

O Not used

Copyright © 2017 LG Electronics. Inc. All right reserved. Only training and service purposes

LG-M250 - MAIN_TOP & BOT

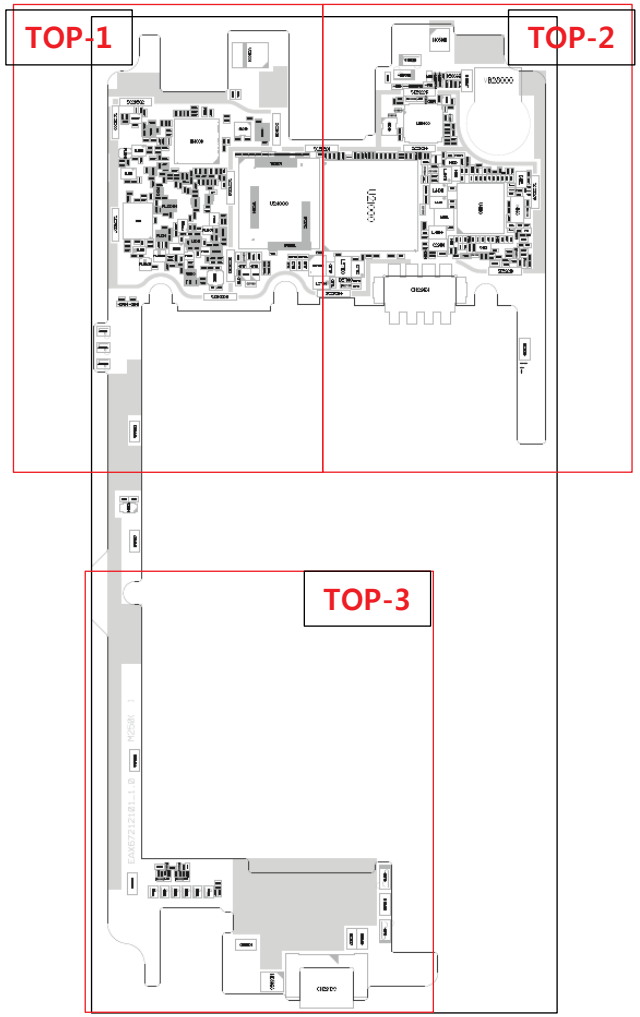

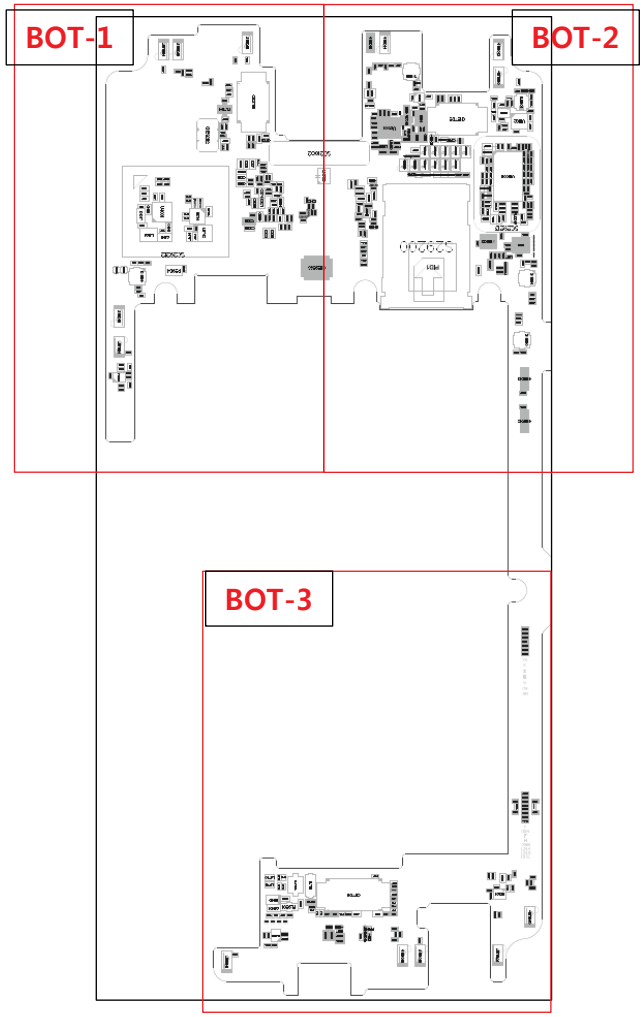

Copyright © 2017 LG Electronics. Inc. All right reserved. Only training and service purposes

LG-M250-MAIN_TOP 1

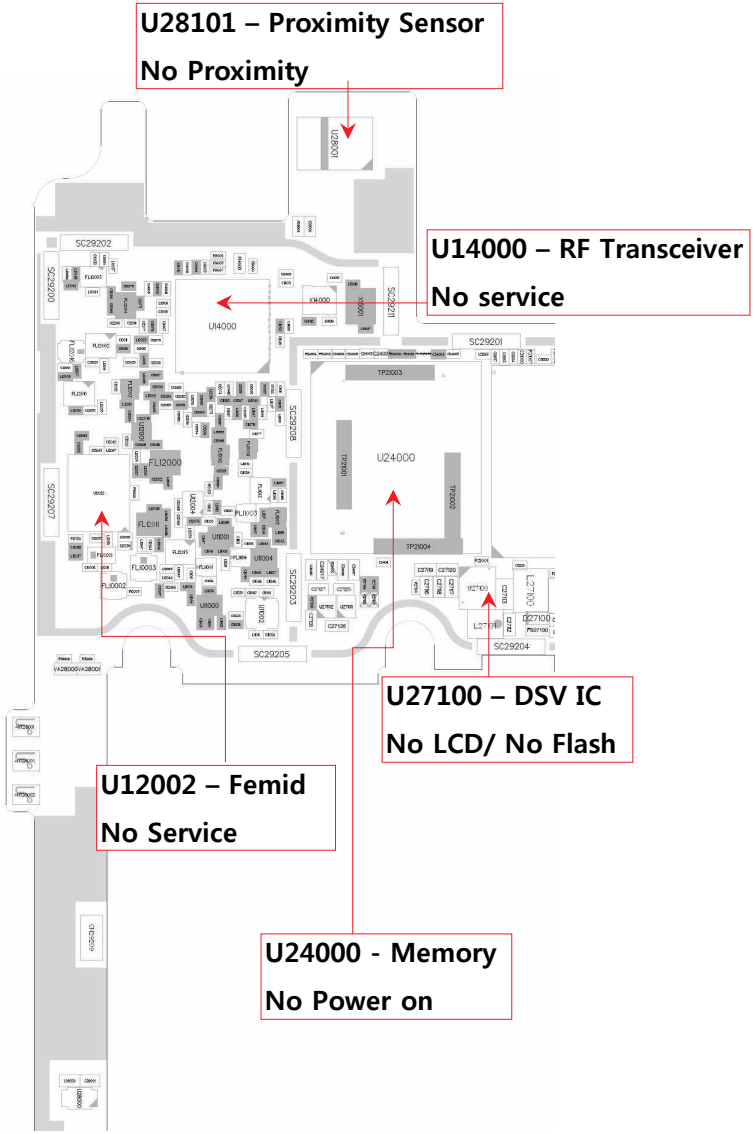

LG-M250-MAIN_TOP 2

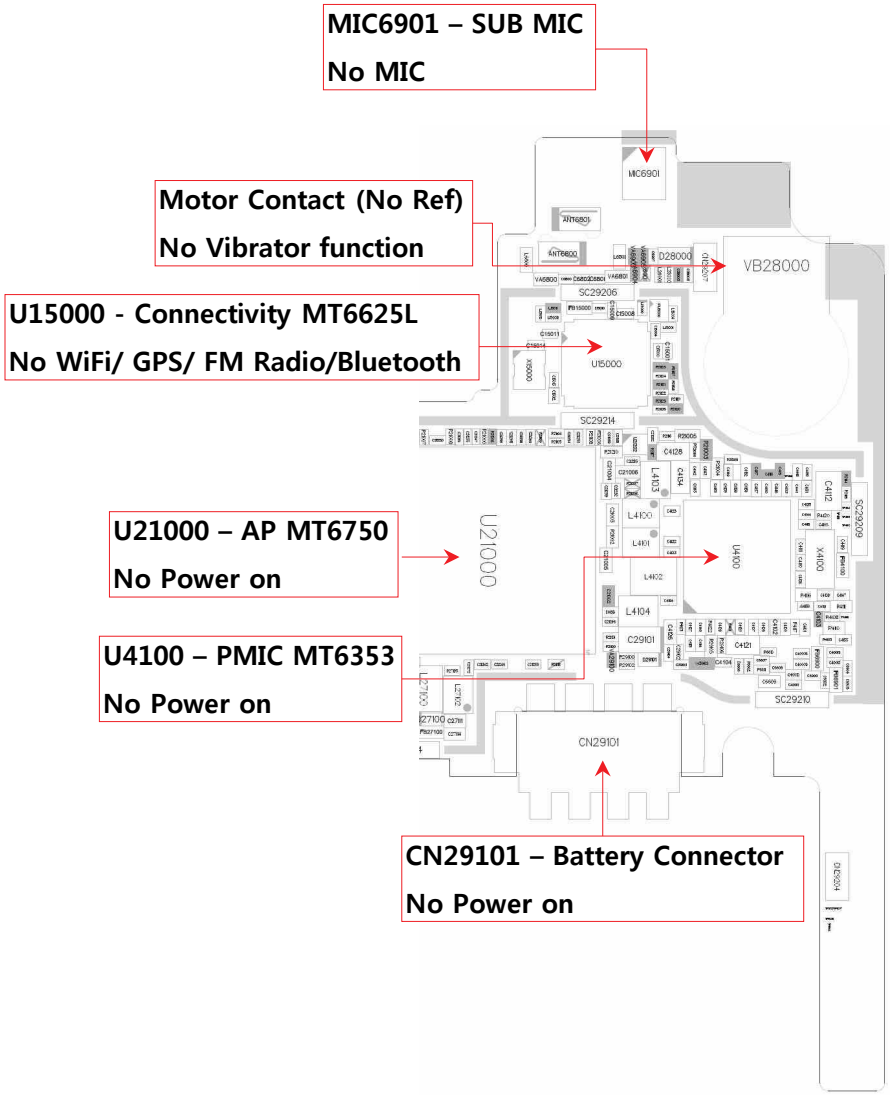

Copyright © 2017 LG Electronics. Inc. All right reserved. Only training and service purposes

LG-M250-MAIN_BOT 1

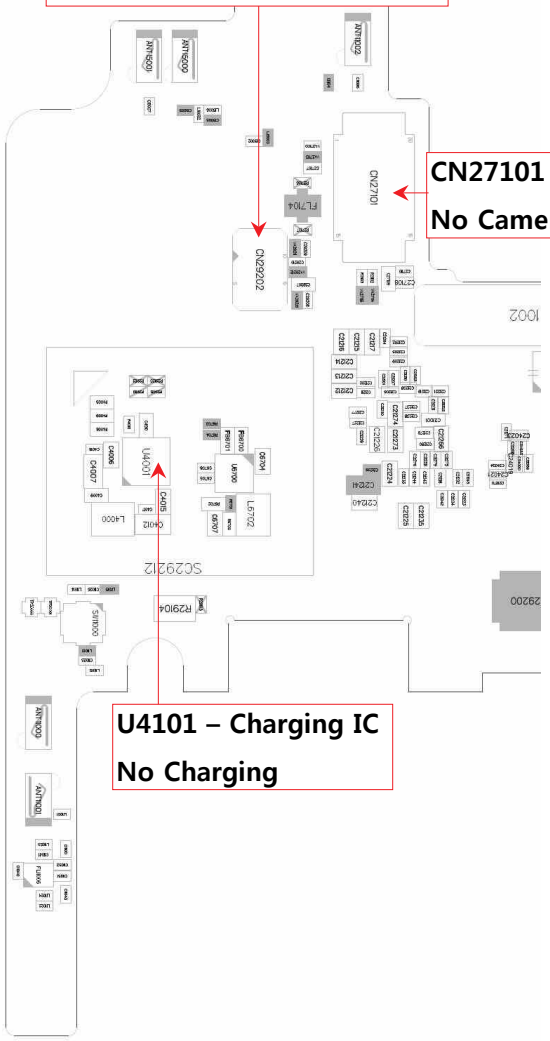

CN29202 – 2nd SIM connector

SIM2 - No service

CN27101 – Main Camera

No Camera(Main)

U4101 – Charging IC

No Charging

LG-M250-MAIN_BOT 2

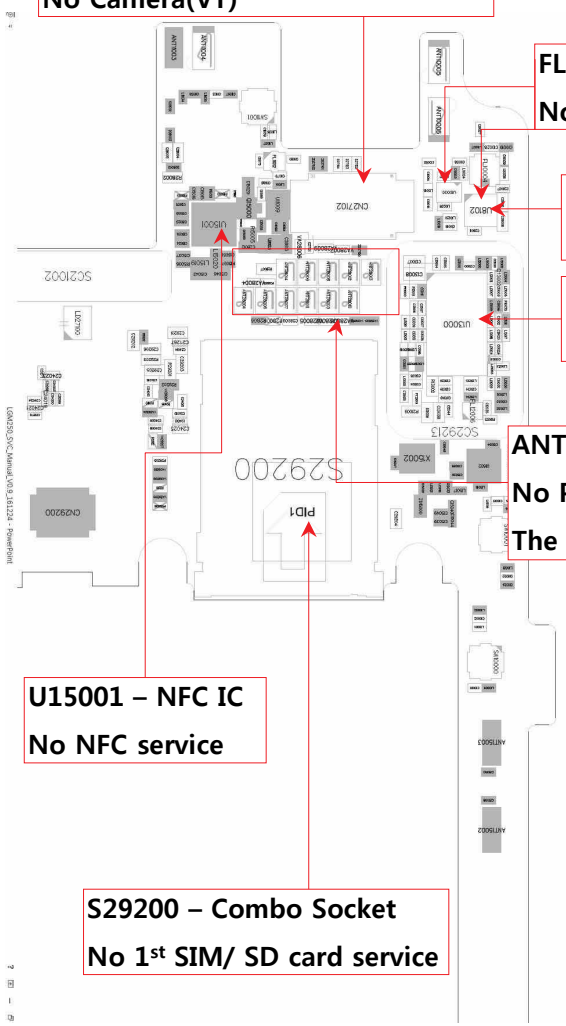

CN27102 – VT Camera connector

No Camera(VT)

FL10004/ U1000

No GPS

U8102 – Acceleration/Compass

No Sensor

U13000 – MMPA

No Service

ANT28004/ANT28006 – Back Key Clip

No Power Key function

The others – Finger key (No finger)

U15001 – NFC IC

No NFC service

S29200 – Combo Socket

No 1st SIM/ SD card service

Copyright © 2017 LG Electronics. Inc. All right reserved. Only training and service purposes

LG-M250-MAIN_TOP 3

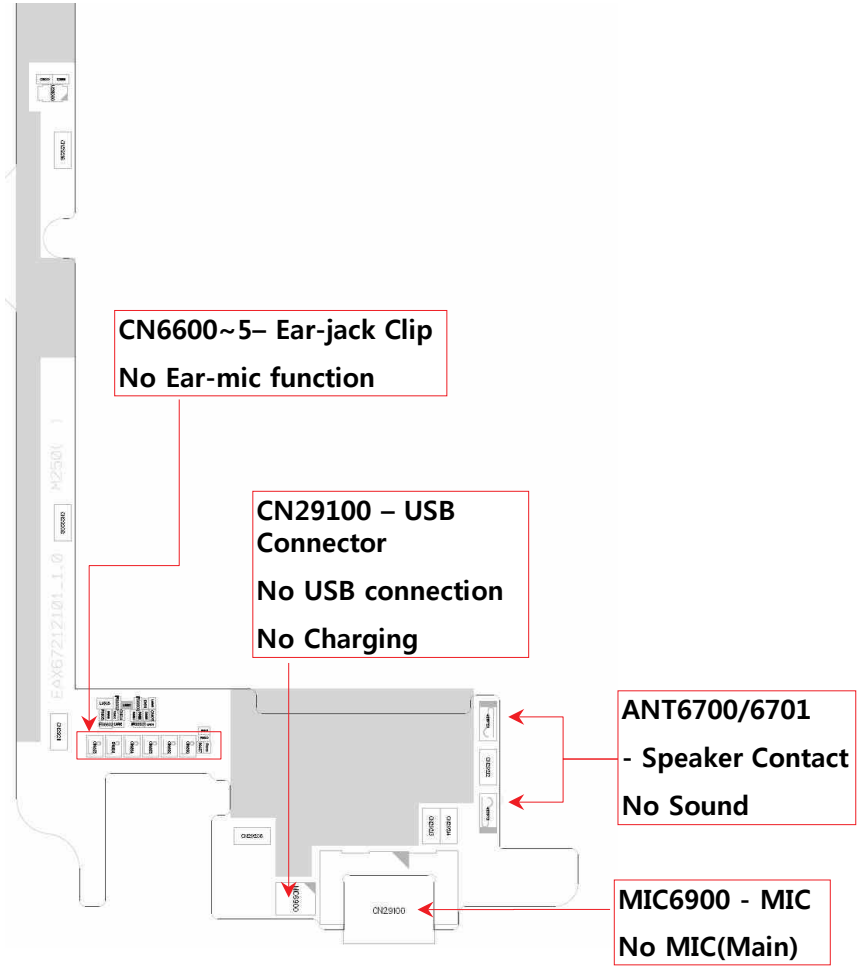

LG-M250-MAIN_BOT 3

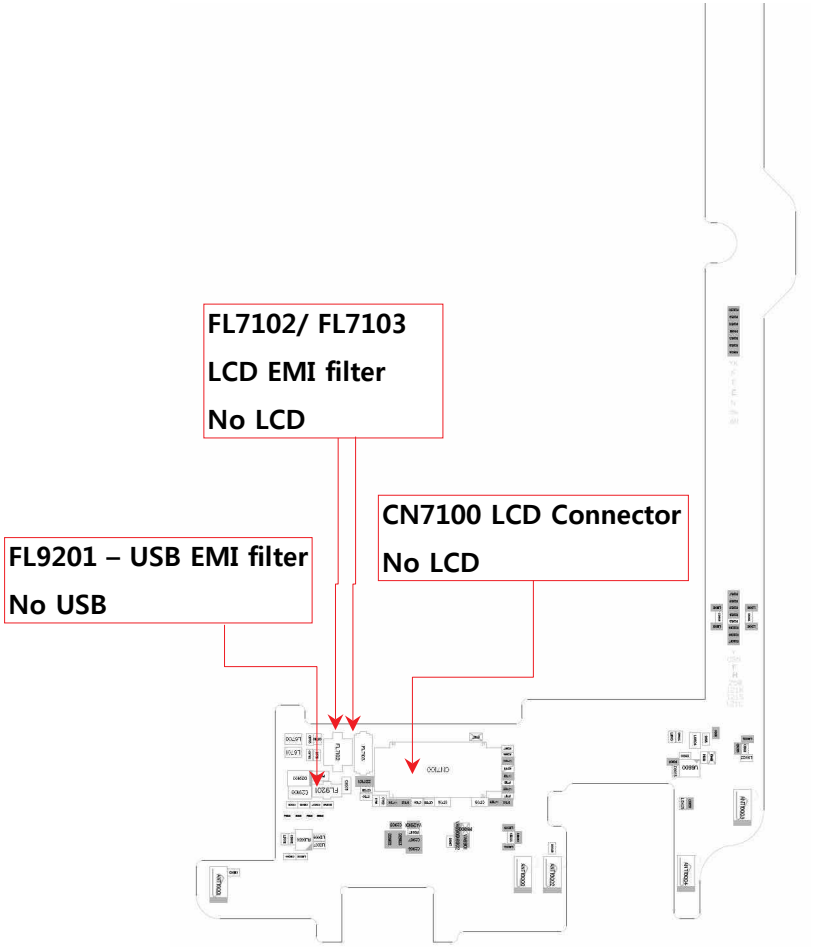

Copyright © 2017 LG Electronics. Inc. All right reserved. Only training and service purposes

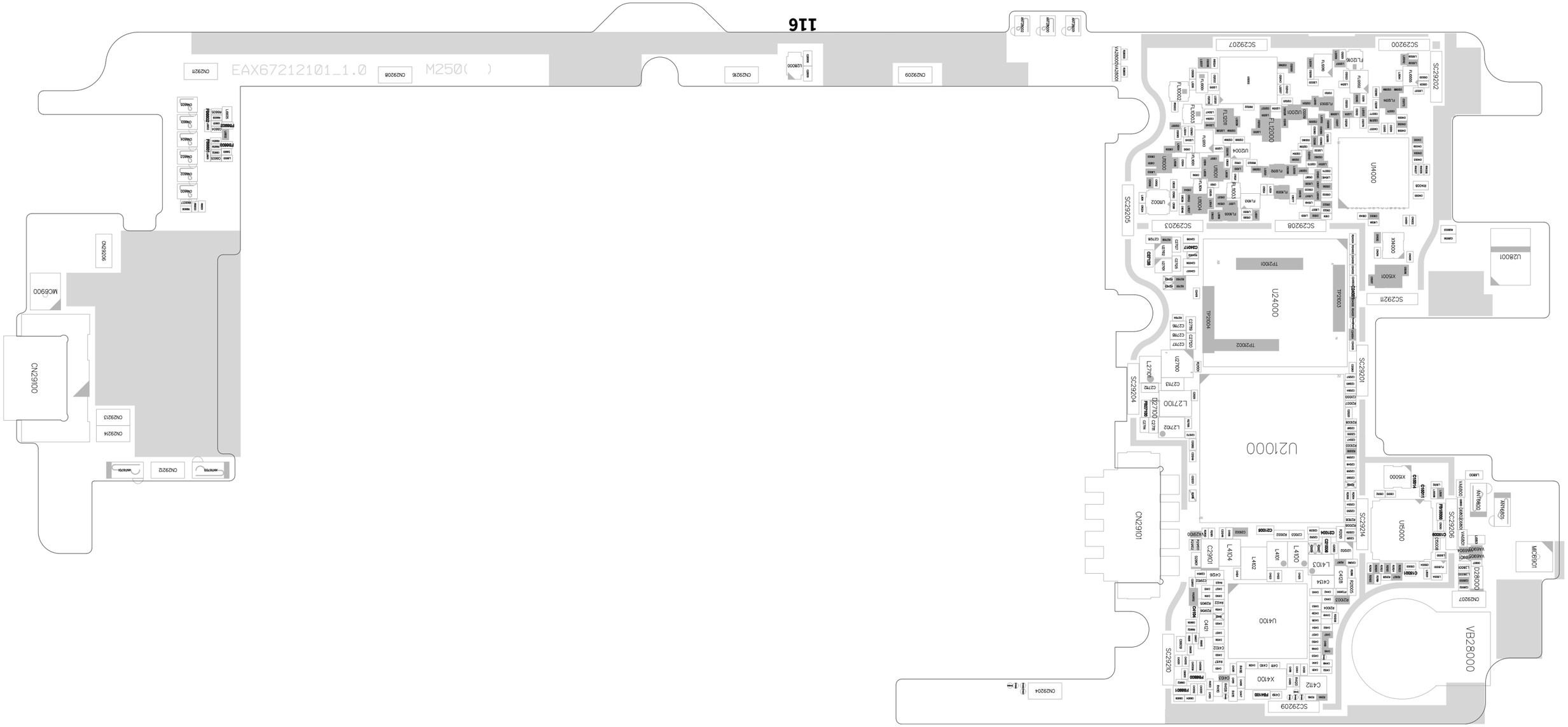
EAX67212101_1.0
M250( )
CN29211
CN29208
CN29216
CN29209
U28000
CN29206
MC6900
CN29100
CN29215
CN29214
CN29212
ANT6200
ANT6201
SC29207
SC29200
SC29202
FL1200
FL2000
U2000
U4000
SC29205
SC29203
SC29208
U2800
XM000
XM500
SC29211
TP2100
U24000
TP2003
TP2004
TP2002
SC29204
SC29220
U21000
CN2901
SC29206
U5000
XM500
ANT6890
MC6901
VB28000
CN29207
U4100
SC29210
X4100
C412
SC29209
CN29204

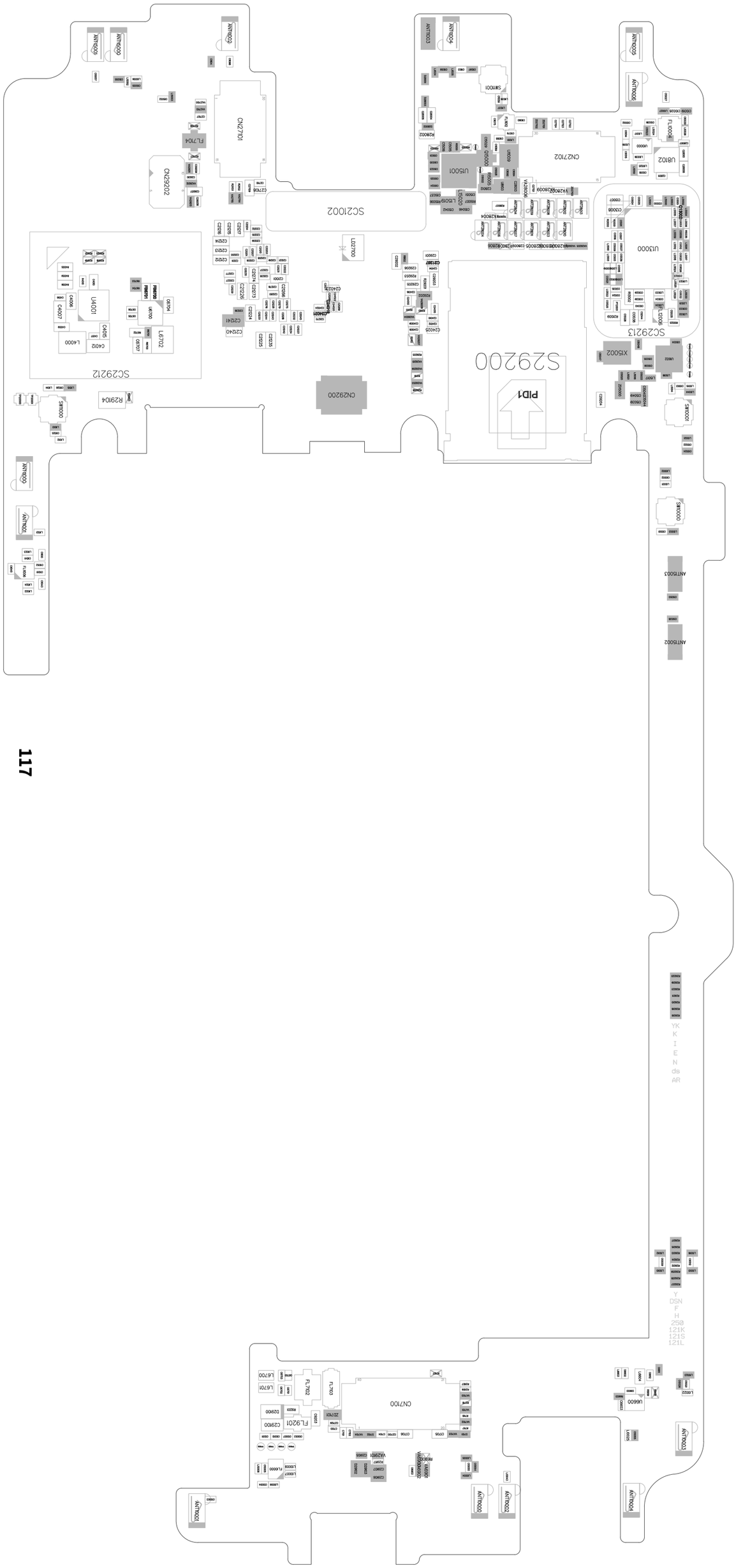
S29200
PID1
SC21002
SC29213
SC29212
CN29200
CN27102
CN27101
CN29202
U15001
U13000
U16102
U14001
L4000
L6702
L6700
L6701
FL7104
FL7102
FL7103
FL9201
C29300
D29300
CN7100
U6600
L6022
ANT6000
ANT6001
ANT6002
ANT6003
ANT6004
ANT6005
ANT6006
ANT6007
ANT6008
ANT6009
ANT6010
ANT6011
ANT6012
ANT6013
ANT5002
ANT5003
SW3000
SW3001
SW3002
SW3003
X15002
U3022
FL3000
FL3001
FL3002
FL3003
FL3004
FL3005
YK
K
I
E
N
ds
AR
Y
DSN
F
H
250
121K
121S
121L

1. Hidden Menu Start

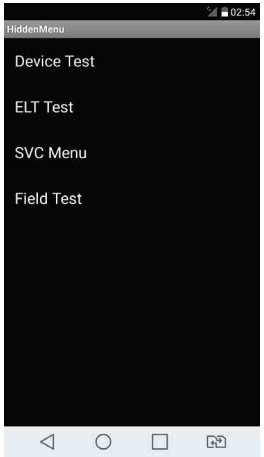

- Start shortcut key:
  *#546368#*250#
- Hidden Menu List
  : Start the desired menu, click

2. Device Test - SAAT

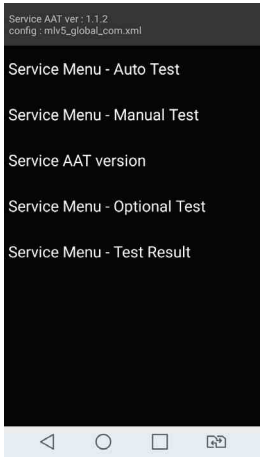

- Service Menu – Auto Test
- Service Menu – Manual Test
- Service AAT version
  → Hidden Menu version Display

2. Device Test

- Service Menu – Auto Test
  → All Test Items are continued one after another.
  → Continuous information on the menu, giving you ability test.

3. Device test List

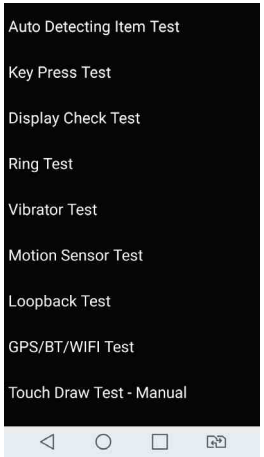

- Service Menu – Manual Test
  → Each test item can be selected and performed by user.

Copyright © 2017 LG Electronics. Inc. All right reserved. Only training and service purposes

1. Auto Detecting Item Test	2. Key Press Test	3. Display Check Test (1)	4. Display Check Test (2)
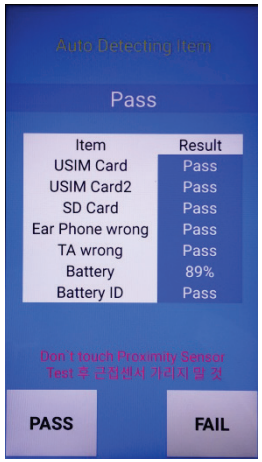	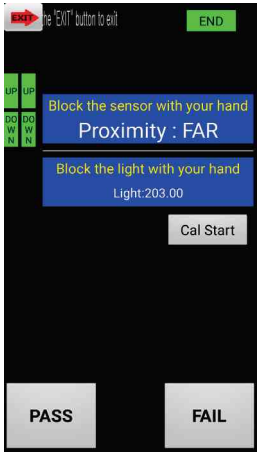	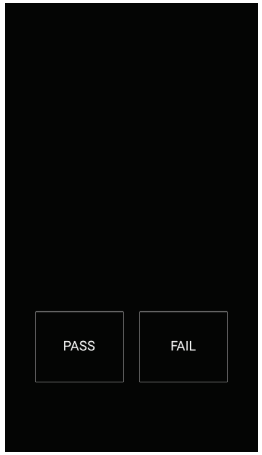	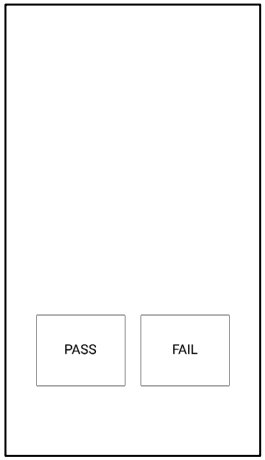
5. Ring Test	6. Vibrator Test	7. Motion Sensor Test	8. Loop Back Test
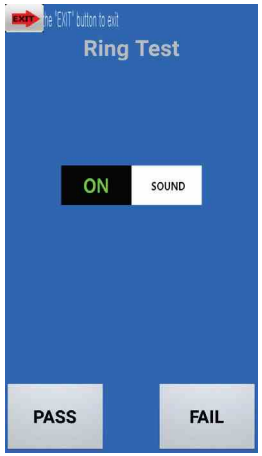	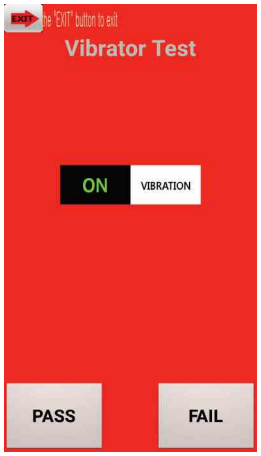		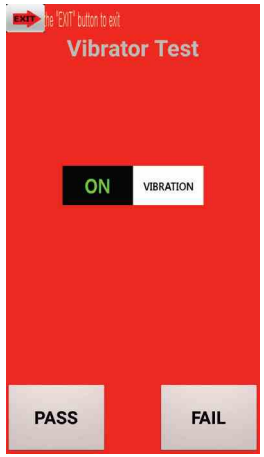

Copyright © 2017 LG Electronics. Inc. All right reserved. Only training and service purposes

9. GPS/BT/WiFi Test	10. Touch Draw Test	11. Camera Test (Main)	12. Camcorder Test
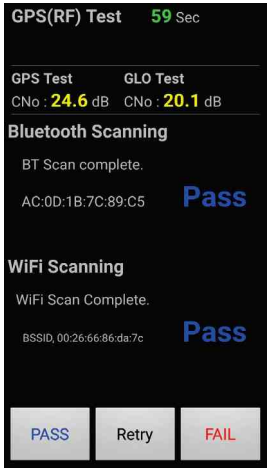	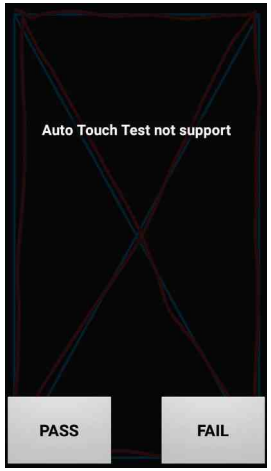		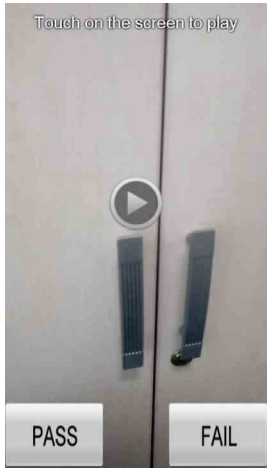
13. Camera Test (VT)	14. FM Radio Test	15. OTG Test	16. FingerPrint Test
	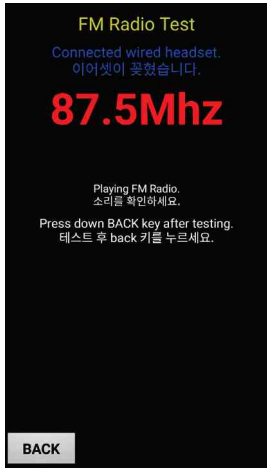	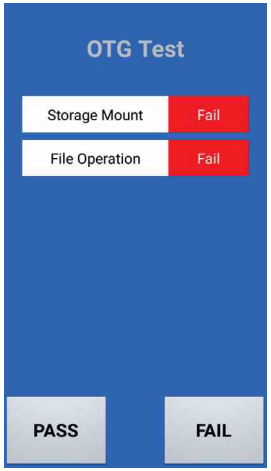	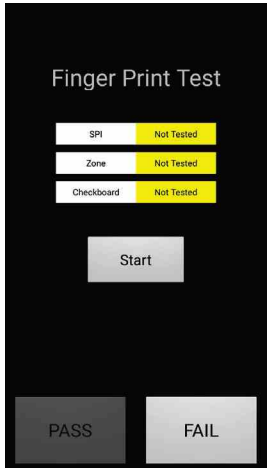

Copyright © 2017 LG Electronics. Inc. All right reserved. Only training and service purposes

1. Summary

Tool Version	DLL name	USB Driver	
LGFLASH v216	LGM250_20161216_LGFLASHv216_Download	LGUnitedMobileDriver_S52MAN314AP22_ML_WHQL_Ver_3.14.1	
Please Check the Version to "LGST ServiceCenter Tool"			
H/W			
	Name	Part No.	SW
D/L Cable	Micro 5P (56-open-910K) USB DLC	RAD32167835	KDZ

2. . USB COM port Setting

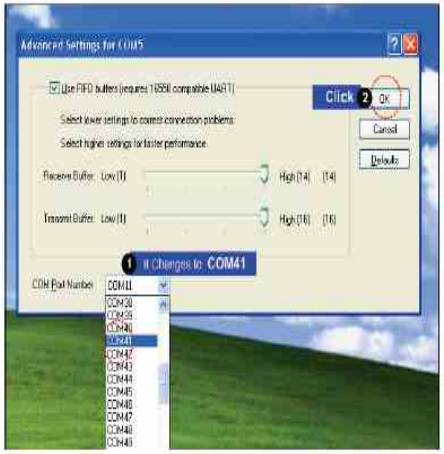

3. USB D/L Cable setting

4. Flash tool D/L setting

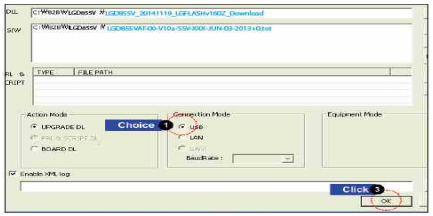

※ If you want more information, please refer LGST ServiceCenter Tool's Notification"Download User Guide".

Copyright © 2017 LG Electronics. Inc. All right reserved. Only training and service purposes

1. Summary

CAL INFORMATION		
S/W VERSION		
Please Check the Version to "B2B"		
H/W		
	Name	Part No.
PIF	PIF200	BJAY0024021
USB Cable	Micro 5P (56-open-910K) USB DLC	RAD32167835
Power Cable	DC Power Cable	RAD32247878
I/O Cable	5P+SATA Cable(130K)	RAD32847816
RF Cable_Main	MXFJM3WX6000	RAD32827895
Power Supply_PIF		
Power Supply_Phone	Power supply 5.0V	
PF Test Equipment		
Notice	1. Use the Battery (Refer to Attached ppt) 1) Phone states: Power off 2) If do not use the battery, TX fails. 2. Port Setting (Refer to Attached ppt) 1) Uart Port1 : Use the "LGE Mobile USB Serial Port"	
CMW 500 RF Cable connection		

2. . USB COM port Setting

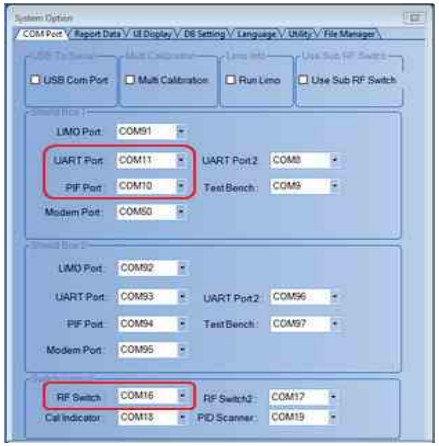

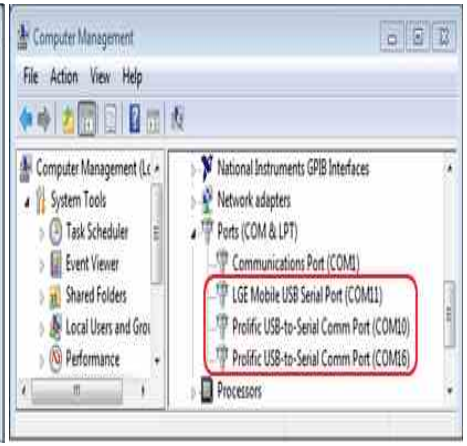

3. Calibration Cable setting

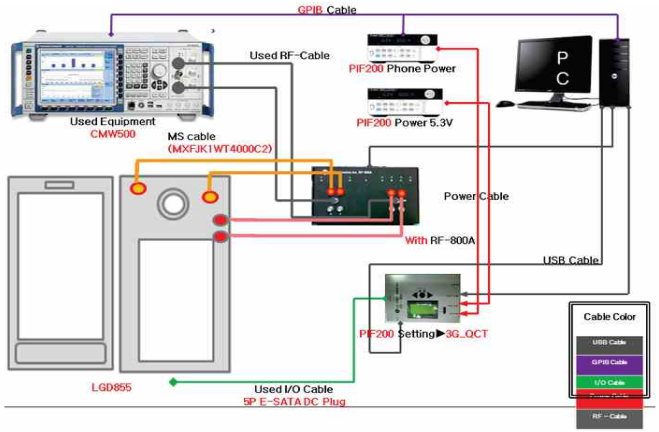

4. Tachyon setting

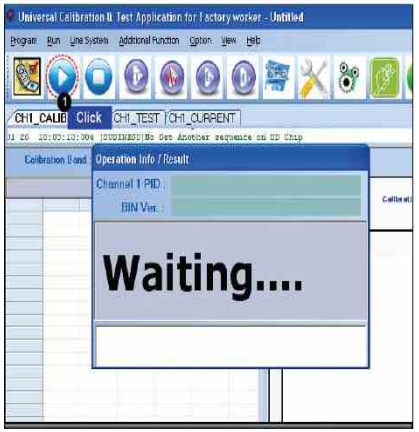

※ If you want more information, please refer LGST ServiceCenter Tool's Notification "RF Calibration User Guide".

Copyright © 2017 LG Electronics. Inc. All right reserved. Only training and service purposes

1. Disassemble Screw (11ea)	2. Disassemble Rear Cover	3. Disassemble Main Antenna	4. Disassemble Connector
	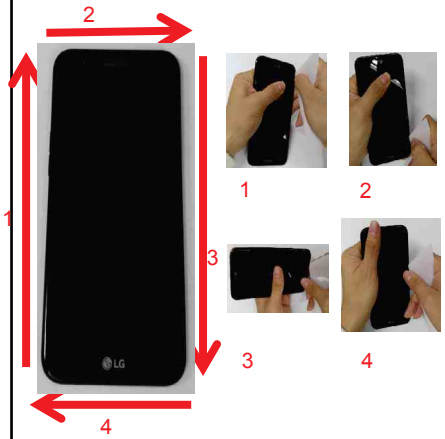		
5. Disassemble Main PCB	6. Disassemble HW Parts (4ea)	7. LCD Disassemble (By Heating Machine)	8. Complete Disassembling
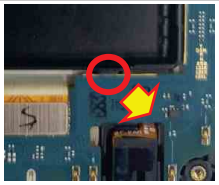 Disassemble Hooks			

Copyright © 2017 LG Electronics. Inc. All right reserved. Only training and service purposes

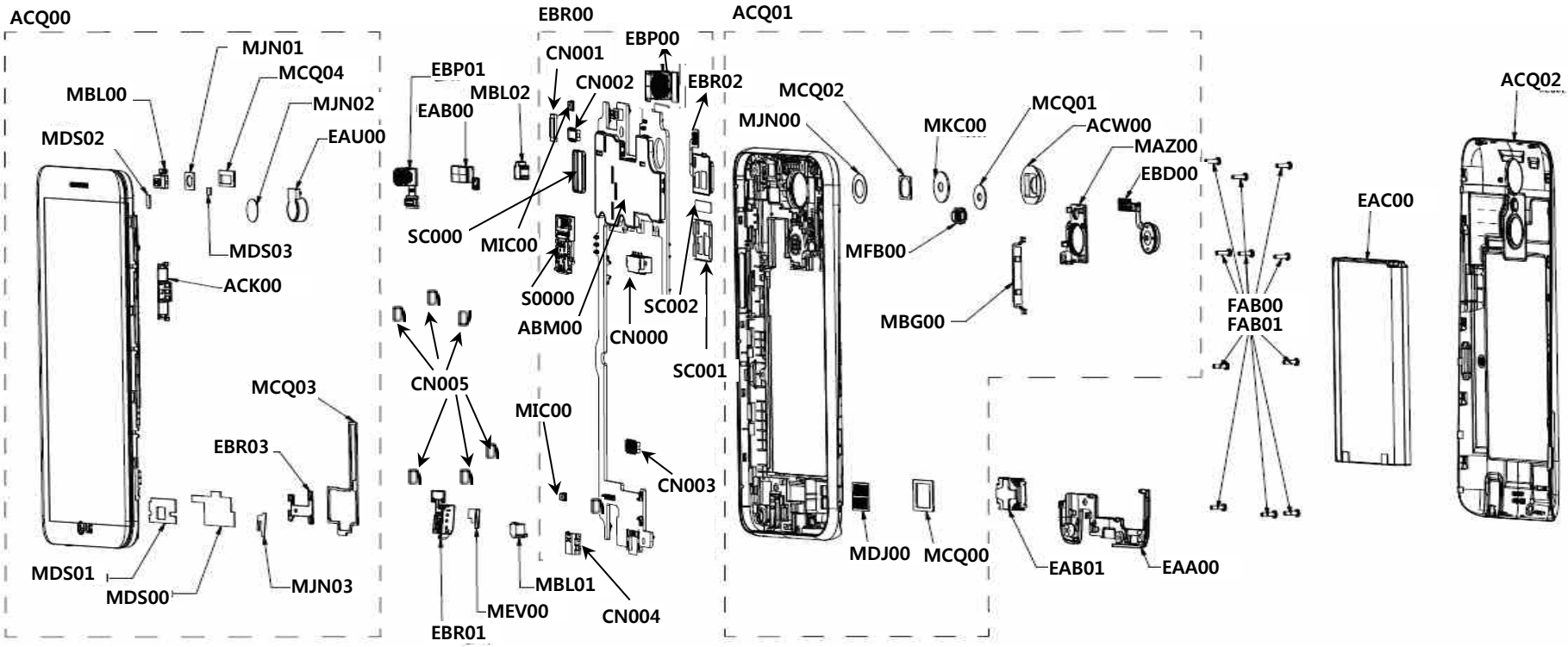

Location no	Description	Location no	Description	Location no	Description	Location no	Description
ACQ00	Cover Assembly	**MDS03**	Gasket	**ACQ01**	Cover Assembly,Rear(SVC)	**MFB00**	Lens,Flash
ACK00	Contact Assembly	**EAU00**	Motor,DC	**EBD00**	Sensor,Fingerprint	**MCQ02**	Damper,Camera
MBL00	Cap	**EBR03**	PCB Assembly,Flexible	**MAZ00**	Bracket	**EAA00**	PIFA Antenna,Multiple
MJN01	Tape,Camera	**MCQ03**	Damper,Speaker	**MBG00**	Button,Side	**EAB01**	Speaker,Dual Mode
MDS00	Gasket	**EBR02**	PCB Assembly,Flexible	**MCQ00**	Damper,Speaker	**EBR00**	PCB Assembly,Main
MCQ04	Damper	**EBR01**	PCB Assembly,Flexible	**ACW00**	Decor Assembly	**EBP01**	Camera Module
MJN02	Tape	**EAB00**	Receiver	**MCQ01**	Damper,Motor	**FAB01**	Screw,Tapping
MJN03	Tape	**MEV00**	Insulator	**MKC00**	Window,Camera	**FAB00**	Screw,Machine
MDS01	Gasket	**MBL01**	Cap	**MDJ00**	Filter	**EAC00**	Rechargeable Battery,Lithium Ion
MDS02	Gasket	**MBL02**	Cap	**MJN00**	Tape,Camera	**ACQ02**	Cover Assembly,Battery
CN004	Connector,I/O	**CN002**	Connector,Terminal	**S0000**	Socket,DIMM/SIMM	**MIC00**	Microphone,Condenser
CN003	Connector,BtoB	**CN001**	Connector,BtoB	**SC002**	Plate	**CN000**	Connector,Terminal Block
SC000	Can,Shield	**SC001**	Can,Shield	**CN005**	Connector,Terminal	**ABM00**	Can Assembly,Shield
EBP00	Camera Module						

Copyright © 2017 LG Electronics. Inc. All right reserved. Only training and service purposes

No	Part No	Description	Qty	Location No.
1	AGQ89269502	Phone Assembly	1	AGQ000000
2	ACQ89427701	Cover Assembly,EMS	1	ACQ100400
3	EBR83867801	PCB Assembly,Main	1	EBR00
4	EBR83832601	PCB Assembly,Main,SMT	1	EBR071800
5	EBR83532001	PCB Assembly,Main,SMT Bottom	1	EBR071600
6	EAE62282201	Capacitor,Ceramic,Chip	4	C12035,C4017,C6600,C6612
7	EAE62286801	Capacitor,Ceramic,Chip	1	C29208
8	EAE62502901	Capacitor,Ceramic,Chip	5	C13007,C13008,C4015,C6704,C6707
9	EAE62506501	Capacitor,Ceramic,Chip	1	C13028
10	EAE62685301	Capacitor,Ceramic,Chip	1	C4010
11	EAE62686001	Capacitor,Ceramic,Chip	1	C4006
12	EAE62726601	Capacitor,Ceramic,Chip	4	C21238,C27108,C27122,C27124
13	EAE62924001	Capacitor(High Frequency),Ceramic,Chip	2	C27121,VA27100
14	EAE62945801	Capacitor(High Frequency),Ceramic,Chip	3	C13036,L10020,L13013
15	EAE62945901	Capacitor(High Frequency),Ceramic,Chip	2	C13037,L13010
16	EAE62946001	Capacitor(High Frequency),Ceramic,Chip	1	L13023
17	EAE62946401	Capacitor(High Frequency),Ceramic,Chip	2	C13035,L13022
18	EAE62946501	Capacitor(High Frequency),Ceramic,Chip	2	C11103,L10024
19	EAE62946601	Capacitor(High Frequency),Ceramic,Chip	1	C10027
20	EAE62947001	Capacitor(High Frequency),Ceramic,Chip	1	C13039
21	EAE62962201	Capacitor(High Frequency),Ceramic,Chip	2	L10022,L13033
22	EAE63023601	Capacitor(High Frequency),Ceramic,Chip	1	L13024
23	EAE62964001	Capacitor(High Frequency),Ceramic,Chip	2	L13006,L13025
24	EAE63222701	Capacitor,Ceramic,Chip	1	C13038
25	EAE63621501	Capacitor,Ceramic,Chip	13	C21212,C21213,C21214,C21215,C21216,C21217,C21224,C21225,C21226,C21235,C21240,C21273,C21274
26	EAE64061601	Capacitor,Ceramic,Chip	5	C21267,C24010,C24015,C24016,C24025
27	EAE64061501	Capacitor,Ceramic,Chip	1	C10340
28	EAG63910001	C-Clip	13	ANT10000,ANT10001,ANT10002,ANT10003,ANT10004,ANT10005,ANT10006,ANT11000,ANT11001,ANT11002,ANT11004,ANT15000,ANT15001
29	EAE64262401	Capacitor,Ceramic,Chip	1	C4012
30	EAF63050001	Varistor	1	R28007
31	EAG63651001	Connector,BtoB	1	CN29202
32	EAG63772101	Connector,RF	4	SW10000,SW10001,SW11000,SW11001
33	EAG64651301	C-Clip	11	ANT28003,ANT28004,ANT28006,ANT28007,ANT28008,ANT28009,ANT28010,ANT28011,ANT28012,ANT28013,ANT28014
34	EAG64909901	Socket,DIMM/SIMM	1	S29200
35	EAH63353101	Diode,TVS	3	C6700,C6701,VA28004
36	EAH63092501	Diode,TVS	1	D29100
37	EAN62578201	IC,Analog Switch	1	U6600
38	EAM62071101	Filter,Bead	2	FB6700,FB6701
39	EAM62730001	Filter,Separator,Switch	1	FL11012

Copyright © 2017 LG Electronics. Inc. All right reserved. Only training and service purposes

No	Part No	Description	Qty	Location No.
40	EAM63050001	Filter,Separator,Switch	1	FL12006
41	EAM62791701	Filter,Separator	1	FL10004
42	EAM63850001	Filter,EMI/Power	1	FL7103
43	EAM63991901	Filter,Separator,Switch	2	FL10000,FL11006
44	EAN63569201	IC,Charger	1	U4001
45	EAN62777001	IC,Speaker Amplifier	1	U6700
46	EAN63886901	IC,Acceleration Sensor	1	U8102
47	EAN63106301	IC,RF Amplifier	1	U10000
48	EAN64259501	IC,Power Amplifier	1	U13000
49	EAP61767701	Inductor,Multilayer,Chip	1	C13001
50	EAP61866601	Inductor,Multilayer,Chip	3	L10006,L11021,L6603
51	EAP61866701	Inductor,Multilayer,Chip	6	L10001,L10014,L10026,L11014,L11036,L15006
52	EAP62108301	Inductor,Multilayer,Chip	2	L11012,L13029
53	EAP61866901	Inductor,Multilayer,Chip	2	C10013,C13034
54	EAP61866401	Inductor,Multilayer,Chip	1	C13024
55	EAP62107901	Inductor,Multilayer,Chip	1	C13023
56	EAP62108101	Inductor,Multilayer,Chip	1	L10016
57	EAP62109001	Inductor,Multilayer,Chip	1	C10002
58	EAP62108401	Inductor,Multilayer,Chip	4	L10009,L11024,L13005,L13018
59	EAP62226201	Inductor,Multilayer,Chip	1	C13013
60	EAP62226101	Inductor,Multilayer,Chip	4	C10018,C13000,C13003,C13012
61	EAP62186301	Inductor,Multilayer,Chip	2	C11059,L11023
62	EAP62226001	Inductor,Multilayer,Chip	1	C10052
63	EAP62226401	Inductor,Multilayer,Chip	2	C13026,L11022
64	EAP62226501	Inductor,Multilayer,Chip	3	C10038,L10007,L10038
65	EAP62226601	Inductor,Multilayer,Chip	2	L13016,L13017
66	EAP62526401	Inductor,Multilayer,Chip	1	C13009
67	EAP63067001	Inductor,Multilayer,Chip	1	C13002
68	EAP63746801	Inductor,Multilayer,Chip	3	C10021,C10029,C11026
69	EAP63808301	Inductor,Wire Wound,Chip	3	L6604,L6700,L6701
70	EAP63666401	Inductor,Wire Wound,Chip	2	L4000,L6702
71	ECCH0002001	Capacitor,Ceramic,Chip	1	C28008
72	EAV63412401	LED,Flash	1	LD27100
73	EBG62665701	Thermistor,NTC	1	PT21001
74	ECCH0004904	Capacitor,Ceramic,Chip	5	C21001,C28004,C28010,C29203,C29207
75	ECCH0000115	Capacitor,Ceramic,Chip	4	C29204,C29205,C29206,C9203
76	ECCH0007804	Capacitor,Ceramic,Chip	2	C1705,C1706
77	ECCH0002002	Capacitor,Ceramic,Chip	1	C4009
78	ECCH0009101	Capacitor,Ceramic,Chip	18	C10015,C21268,C21269,C21270,C21271,C24008,C24012,C24013,C24014,C24019,C24020,C24021,C24022,C28007,C28011,C6705,C6706,C6903
79	ECCH0007805	Capacitor,Ceramic,Chip	1	C21266
80	ECCH0009102	Capacitor,Ceramic,Chip	1	D6602

Copyright © 2017 LG Electronics. Inc. All right reserved. Only training and service purposes

No	Part No	Description	Qty	Location No.
81	ECCH0009103	Capacitor,Ceramic,Chip	25	C10000,C10003,C10004,C10005,C10009,C10012,C10014,C10028,C11025,C11040,C11041,C11079,C11080,C11088,C11089,C11096,C12044,C13004,C13029,C15002,C15007,L10008,L10025,L10043,L10052
82	ECCH0009104	Capacitor,Ceramic,Chip	14	C10001,C10010,C10011,C10022,C10053,C11051,C11052,C11100,C13018,C13022,C13025,C27129,C27130,L10017
83	ECCH0009105	Capacitor,Ceramic,Chip	2	C7101,C7102
84	ECCH0009106	Capacitor,Ceramic,Chip	5	C10007,C11043,C11075,C13017,C6603
85	ECCH0009109	Capacitor,Ceramic,Chip	2	C6702,C6703
86	ECCH0009208	Capacitor,Ceramic,Chip	2	L10015,L13012
87	ECCH0009216	Capacitor,Ceramic,Chip	1	C13020
88	ECCH0009502	Capacitor,Ceramic,Chip	1	L13007
89	ECCH0009514	Capacitor,Ceramic,Chip	3	C13016,C29209,C29210
90	ECCH0009520	Capacitor,Ceramic,Chip	1	C13032
91	ECCH0017301	Capacitor,Ceramic,Chip	33	C21200,C21201,C21202,C21203,C21204,C21205,C21206,C21207,C21208,C21209,C21210,C21211,C21218,C21219,C21221,C21222,C21223,C21237,C21275,C21276,C21277,C21278,C21279,C21280,C24009,C24023,C24024,C27107,C27110,C27123,C28009,C7100,C7104
92	ECCH0017601	Capacitor,Ceramic,Chip	2	C27109,C29202
93	ECCH0034801	Capacitor,Ceramic,Chip	12	C21227,C21228,C21229,C21230,C21231,C21232,C21233,C21234,C21242,C21243,C21244,C21245
94	ECCH0042301	Capacitor,Ceramic,Chip	1	C4007
95	ECZH0000813	Capacitor,Ceramic,Chip	1	C28005
96	ECZH0000830	Capacitor,Ceramic,Chip	1	C29201
97	ECZH0003503	Capacitor,Ceramic,Chip	1	C29100
98	ECZH0025911	Capacitor,Ceramic,Chip	1	C13005
99	ECZH0025917	Capacitor,Ceramic,Chip	1	C4016
100	ENBY0036001	Connector,BtoB	1	CN7100
101	ERHY0009501	Resistor,Chip	5	C13019,R10025,R10035,R29212,R6619
102	ENBY0040701	Connector,BtoB	2	CN27101,CN27102
103	ERHY0000166	Resistor,Chip	1	R21009
104	ERHY0000254	Resistor,Chip	1	R28002
105	ERHY0009507	Resistor,Chip	1	R29205
106	ERHY0009503	Resistor,Chip	1	R28004
107	ERHY0009505	Resistor,Chip	2	R13000,R4010
108	ERHY0009506	Resistor,Chip	2	R7117,R7118
109	ERHZ0000401	Resistor,Chip	3	R13002,R29201,R6700
110	ERHY0009519	Resistor,Chip	1	R13001
111	ERHY0009526	Resistor,Chip	4	R21102,R21103,R21106,R21107
112	MBK64892904	Can,Shield	1	SC29213
113	ERHY0009536	Resistor,Chip	1	R29117
114	ERHY0035601	Resistor,Chip	1	R29104
115	MBK64892906	Can,Shield	1	SC29212
116	ERHZ0000203	Resistor,Chip	3	R4005,R4006,R4009
117	MGJ65374601	Plate	1	SC21002
118	SAFO0000401	Wire Pad,Open	7	R21110,R21111,R21112,R21113,R27111,R29118,R29119

Copyright © 2017 LG Electronics. Inc. All right reserved. Only training and service purposes

No	Part No	Description	Qty	Location No.
119	ERHZ0000405	Resistor,Chip	2	R29203,R6702
120	SAFP0000401	Wire Pad,Short	12	R15000,R15003,R27106,R27107,R28005,R29103,R29120,R29121,R29206,R6618,R6900,R7107
121	SEVY0008901	Varistor	6	VA28002,VA28005,VA28006,VA28007,VA28008,VA28009
122	ERHZ0000486	Resistor,Chip	1	R9201
123	MEZ65049701	Label	1	PID1
124	SFEY0015901	Filter,EMI/Power	1	FL7102
125	SFEY0015301	Filter,EMI/Power	1	FL9201
126	EBR83545901	PCB Assembly,Main,SMT Top	1	EBR071700
127	EAB62950801	Microphone,Condenser	2	MIC6900,MIC6901
128	EAE62282201	Capacitor,Ceramic,Chip	2	C12035,C4017,C6600,C6612
129	EAE62286801	Capacitor,Ceramic,Chip	1	C29208
130	EAE62502901	Capacitor,Ceramic,Chip	3	C13007,C13008,C4015,C6704,C6707
131	EAE62506501	Capacitor,Ceramic,Chip	2	C13028
132	EAE62685301	Capacitor,Ceramic,Chip	4	C4010
133	EAE62726601	Capacitor,Ceramic,Chip	3	C21238,C27108,C27122,C27124
134	EAE62762301	Capacitor,Ceramic,Chip	11	C29104,C4100,C4102,C4127,C4135,C4136,C4137,C4138,C4139,C4140,C4155
135	EAE62767801	Capacitor,Ceramic,Chip	1	C4112
136	EAE62946901	Capacitor(High Frequency),Ceramic,Chip	1	C13010
137	EAE62945801	Capacitor(High Frequency),Ceramic,Chip	1	C13036,L10020,L13013
138	EAE63286601	Capacitor,Ceramic,Chip	4	C4122,C4123,C4124,C4125
139	EAE62964001	Capacitor(High Frequency),Ceramic,Chip	1	L13006,L13025
140	EAE62963801	Capacitor(High Frequency),Ceramic,Chip	1	L12047
141	EAE63541901	Capacitor,Ceramic,Chip	1	C27113
142	EAE64022001	Acoustic Noise MLCC	1	C4121
143	EAE64061601	Capacitor,Ceramic,Chip	8	C21267,C24010,C24015,C24016,C24025
144	EAE64281701	Capacitor,TA,Polymer	1	C29101
145	EAG63652301	C-Clip	2	ANT6700,ANT6701
146	EAG63749801	Connector,Terminal Block	1	CN29101
147	EAE64383601	Capacitor,Ceramic,Chip	3	C27118,C27119,C27120
148	EAG63910001	C-Clip	2	ANT10000,ANT10001,ANT10002,ANT10003,ANT10004,ANT10005,ANT10006,ANT11000,ANT11001,ANT11002,ANT11004,ANT15000,ANT15001
149	EAG64149901	Connector,I/O	1	CN29100
150	EAG64651301	C-Clip	9	ANT28003,ANT28004,ANT28006,ANT28007,ANT28008,ANT28009,ANT28010,ANT28011,ANT28012,ANT28013,ANT28014
151	EAH61992801	Diode,Schottky	1	D27100
152	EAH62213401	Diode,TVS	1	D29101
153	EAG64451301	Connector,Terminal	10	CN29204,CN29206,CN29207,CN29208,CN29209,CN29211,CN29212,CN29213,CN29214,CN29216
154	ELCH0003842	Inductor,Multilayer,Chip	2	L6800,L6801
155	EAM62691501	Filter,Ceramic	1	FL12016
156	EAH63353101	Diode,TVS	1	C6700,C6701,VA28004
157	EAM63031101	Filter,Separator,Switch	1	U11002
158	EAM62230101	Filter,Bead	1	FB6902

Copyright © 2017 LG Electronics. Inc. All right reserved. Only training and service purposes

No	Part No	Description	Qty	Location No.
159	EAM63450501	Filter,Saw,Dual	1	FL11013
160	EAM62252001	Filter,Bead	3	FB6600,FB6601,FB6602
161	EAM63670001	Filter,Saw	1	FL15000
162	EAM63530101	Filter,Duplexer	1	FL12002
163	EAM63930301	Filter,Duplexer	1	FL12010
164	EAM64030601	Filter,Separator	1	FL10001
165	EAM63410201	Filter,Saw	1	FL11003
166	EAM63090201	Filter,Saw	1	FL11001
167	EAM63730401	Filter,Bead	1	FB27100
168	EAM64072401	Filter,Duplexer	1	FL12013
169	EAN62357301	IC,Hall Effect Switch	1	U28000
170	EAM63390101	Filter,Saw	1	FL11014
171	EAN63486501	IC,WiFi	1	U15000
172	EAN63606501	IC,LDO Voltage Regulator	1	U21202
173	EAN63648001	IC,Proximity	1	U28001
174	EAN63788301	IC,RF Amplifier	1	FL10005
175	EAN63807801	IC,RF Amplifier	1	U12004
176	EAN64086201	IC,RF Transceiver,4G	1	U14000
177	EAN64254101	IC,MCP,eMMC	1	U24000
178	EAN64294701	IC,PMIC	1	U4100
179	EAN64345901	IC,Digital Baseband Processor,4G	1	U21000
180	EAP61866301	Inductor,Multilayer,Chip	1	L10041
181	EAN64086901	IC,Sub PMIC	1	U27100
182	EAN64407901	IC,Voltage Regulator	1	U27102
183	EAN64428001	IC,LDO Voltage Regulator	1	U27101
184	EAP61747501	Inductor,Multilayer,Chip	1	L11050
185	EAP61767801	Inductor,Multilayer,Chip	1	L12033
186	EAP61866601	Inductor,Multilayer,Chip	4	L10006,L11021,L6603
187	EAP63106701	Inductor,Wire Wound,Chip	1	L27100
188	EAP63185901	Inductor,Multilayer,Chip	1	L27101
189	EAP61866701	Inductor,Multilayer,Chip	1	L10001,L10014,L10026,L11014,L11036,L15006
190	EAP61866901	Inductor,Multilayer,Chip	1	C10013,C13034
191	EAP61946101	Inductor,Multilayer,Chip	2	C12055,C12063
192	EAP63666401	Inductor,Wire Wound,Chip	1	L4000,L6702
193	EAP62107901	Inductor,Multilayer,Chip	2	C13023
194	EAP62108101	Inductor,Multilayer,Chip	1	L10016
195	EAP62108001	Inductor,Multilayer,Chip	3	C11019,L12032,L15001
196	EAP63786501	Inductor,Wire Wound,Chip	3	L4100,L4101,L4103
197	EAP62108401	Inductor,Multilayer,Chip	2	L10009,L11024,L13005,L13018
198	EAT63375201	Module,Rx Module	1	U12002
199	EAP62108201	Inductor,Multilayer,Chip	2	C11002,L11049
200	EAP62108301	Inductor,Multilayer,Chip	1	L11012,L13029

Copyright © 2017 LG Electronics. Inc. All right reserved. Only training and service purposes

No	Part No	Description	Qty	Location No.
201	EAP62108701	Inductor,Multilayer,Chip	2	L10011,L11011
202	EAP62108501	Inductor,Multilayer,Chip	3	C11022,C11049,C12012
203	EAP63826001	Inductor,Wire Wound,Chip	1	L4102
204	EAP62225901	Inductor,Multilayer,Chip	2	C12054,C12085
205	EBC61856201	Resistor,Chip	3	R21001,R24003,R24004
206	EAP62109001	Inductor,Multilayer,Chip	1	C10002
207	EBC61997701	Resistor,Chip	1	R6601
208	EAW63023701	Oscillator,TCXO	1	X15000
209	EAW63243401	Oscillator,VCTCXO	1	X14000
210	EAP62226201	Inductor,Multilayer,Chip	2	C13013
211	EAP62226501	Inductor,Multilayer,Chip	2	C10038,L10007,L10038
212	EBC62575901	Resistor,Chip	2	R14006,R14007
213	EBC62581901	Resistor,Chip	2	R6604,R6605
214	EAP62226601	Inductor,Multilayer,Chip	1	L13016,L13017
215	EBC62035901	Resistor,Chip	2	R4122,R4123
216	EBC62595901	Resistor,Chip	1	R14005
217	EAP62226701	Inductor,Multilayer,Chip	1	L12015
218	EAP63067001	Inductor,Multilayer,Chip	2	C13002
219	EBG62665701	Thermistor,NTC	1	PT21001
220	ERHY0009547	Resistor,Chip	1	R4117
221	ECA30360101	Coupler,RF Directional	2	FL10002,FL10003
222	ECCH0000198	Capacitor,Ceramic,Chip	2	C24018,C6609
223	EAP63729001	Inductor,Wire Wound,Chip	1	L6605
224	EAP63748801	Inductor,Multilayer,Chip	1	L11048
225	EAP63769801	Inductor,Wire Wound,Chip	1	L27102
226	ECCH0002001	Capacitor,Ceramic,Chip	2	C28008
227	ECCH0009216	Capacitor,Ceramic,Chip	6	C13020
228	ECCH0009228	Capacitor,Ceramic,Chip	1	C15011
229	ECCH0017501	Capacitor,Ceramic,Chip	2	C4128,C4134
230	ECZH0025920	Capacitor,Ceramic,Chip	1	C14001
231	ECCH0000182	Capacitor,Ceramic,Chip	2	C24007,C24017
232	EDSY0010501	Diode,Switching	1	D28000
233	ECCH0017301	Capacitor,Ceramic,Chip	36	C21200,C21201,C21202,C21203,C21204,C21205,C21206,C21207,C21208,C21209,C21210,C21211,C21218,C21219,C21221,C21222,C21223,C21237,C21275,C21276,C21277,C21278,C21279,C21280,C24009,C24023,C24024,C27107,C27110,C27123,C28009,C7100,C7104
234	ECCH0004904	Capacitor,Ceramic,Chip	6	C21001,C28004,C28010,C29203,C29207
235	ERHY0000166	Resistor,Chip	1	R21009
236	EAX67212101	PCB,Main	1	EAX010001
237	ERHY0009301	Resistor,Chip	2	R28000,R28001
238	ERHY0009302	Resistor,Chip	1	R29106
239	ECZH0000813	Capacitor,Ceramic,Chip	1	C28005

Copyright © 2017 LG Electronics. Inc. All right reserved. Only training and service purposes

No	Part No	Description	Qty	Location No.
240	ECCH0009101	Capacitor,Ceramic,Chip	32	C10015,C21268,C21269,C21270,C21271,C24008,C24012,C24013,C24014,C24019,C24020,C24021,C24022,C28007,C28011,C6705,C6706,C6903
241	ERHY0009303	Resistor,Chip	2	R6608,R6609
242	ECCH0009102	Capacitor,Ceramic,Chip	2	D6602
243	ERHY0009307	Resistor,Chip	1	R6607
244	ECCH0009103	Capacitor,Ceramic,Chip	41	C10000,C10003,C10004,C10005,C10009,C10012,C10014,C10028,C11025,C11040,C11041,C11079,C11080,C11088,C11089,C11096,C12044,C13004,C13029,C15002,C15007,L10008,L10025,L10043,L10052
245	ERHY0009311	Resistor,Chip	1	R10003
246	ECCH0009104	Capacitor,Ceramic,Chip	3	C10001,C10010,C10011,C10022,C10053,C11051,C11052,C11100,C13018,C13022,C13025,C27129,C27130,L10017
247	ERHY0009312	Resistor,Chip	1	R21007
248	ECCH0009106	Capacitor,Ceramic,Chip	6	C10007,C11043,C11075,C13017,C6603
249	ERHY0009504	Resistor,Chip	3	R4103,R6602,R6610
250	ECCH0009208	Capacitor,Ceramic,Chip	2	L10015,L13012
251	ERHY0009506	Resistor,Chip	2	R7117,R7118
252	ECCH0009226	Capacitor,Ceramic,Chip	1	C12033
253	ERHY0009527	Resistor,Chip	1	R6606
254	ERHY0009511	Resistor,Chip	3	R21008,R4120,R6611
255	ECZH0025911	Capacitor,Ceramic,Chip	1	C13005
256	ERHY0009543	Resistor,Chip	1	R29102
257	ECZH0025916	Capacitor,Ceramic,Chip	7	C28002,C6604,C6605,C6801,C6802,C6902,C6906
258	ERHY0009526	Resistor,Chip	7	R21102,R21103,R21106,R21107
259	ECZH0025917	Capacitor,Ceramic,Chip	2	C4016
260	ERHZ0000236	Resistor,Chip	1	R14008
261	ERHY0009559	Resistor,Chip	1	R4108
262	ERHZ0000401	Resistor,Chip	1	R13002,R29201,R6700
263	ERHZ0000404	Resistor,Chip	1	R4116
264	ERHZ0000249	Resistor,Chip	1	R28003
265	ERHZ0000267	Resistor,Chip	1	R4110
266	EXXY0018701	Crystal	1	X4100
267	ERHZ0000308	Resistor,Chip	1	R29105
268	ERHY0009501	Resistor,Chip	12	C13019,R10025,R10035,R29212,R6619
269	SFBH0008101	Filter,Bead	1	FB15000
270	SFBH0008102	Filter,Bead	2	FB6900,FB6901
271	SFBH0008106	Filter,Bead	1	FB4100
272	ERHY0009536	Resistor,Chip	5	R29117
273	ERHZ0000204	Resistor,Chip	1	R21004
274	ERHZ0000295	Resistor,Chip	1	R4111
275	ERHZ0000320	Resistor,Chip	1	R21210
276	SAFO0000401	Wire Pad,Open	2	R21110,R21111,R21112,R21113,R27111,R29118,R29119
277	MBV62321701	Clip	13	SC29200,SC29201,SC29202,SC29203,SC29204,SC29205,SC29206,SC29207,SC29208,SC29209,SC29210,SC29211,SC29214

Copyright © 2017 LG Electronics. Inc. All right reserved. Only training and service purposes

No	Part No	Description	Qty	Location No.
278	SAFP0000401	Wire Pad,Short	7	R15000,R15003,R27106,R27107,R28005,R29103,R29120,R29121,R29206,R6618,R6900,R7107
279	SEVY0005201	Varistor	4	VA28000,VA28001,VA6800,VA6801
280	MEZ65049703	Label	0	PID2
281	RAA34548901	Resin,PC	0	RAA050100
282	EBR83847801	PCB Assembly,Main,Insert	1	EBR071500
283	ABM75396801	Can Assembly,Shield	1	ABM070300
284	MCQ68970101	Damper	1	MCQ000000
285	MCQ68970102	Damper	1	MCQ000001
286	MDS65756301	Gasket	1	MDS000000
287	MEV65994901	Insulator	1	MEV000000
288	MBK64892901	Can,Shield	1	MBK070300
289	MBK64892907	Can,Shield	1	MBK070301
290	MCQ68970106	Damper	1	MCQ000002
291	RAA34549103	Resin,PC	0	RAA050100
292	MEV66133101	Insulator	1	MEV000000
293	EBR83532201	PCB Assembly,Flexible	1	EBR02
294	EBR83570601	PCB Assembly,Flexible,Insert	1	EBR070100
295	MJN70247901	Tape	1	MJN000000
296	EBR83570301	PCB Assembly,Flexible,SMT	1	EBR070400
297	EBR83532301	PCB Assembly,Flexible,SMT Top	1	EBR070300
298	EAG63650901	Connector,BtoB	1	CN10001
299	EAX67192801	PCB,Flexible	1	EAX010700
300	EBR83570401	PCB Assembly,Flexible,SMT Bottom	1	EBR070200
301	EAG64909801	Socket,DIMM/SIMM	1	J10001
302	EBP63001801	Camera Module	1	EBP000000
303	ACQ89286301	Cover Assembly,Rear	1	ACQ063300
304	ACQ89346601	Cover Assembly,Rear(SVC)	1	ACQ105800
305	EAA64508001	PIFA Antenna,RF	1	EAA030106
306	EAA64529701	PIFA Antenna,WiFi	1	EAA030105
307	EAA64549601	PIFA Antenna,GPS	1	EAA030107
308	EAA64568901	PIFA Antenna,RF	1	EAA030104
309	EBD62925601	Sensor,Fingerprint	1	EBD00
310	MAZ65468801	Bracket	1	MAZ00
311	MBG66263701	Button,Side	1	MBG00
312	MCK69524801	Cover,Rear	1	MCK063301
313	MCQ68948001	Damper,Speaker	1	MCQ00
314	MCQ68986401	Damper,Motor	1	MCQ01
315	MJN70091402	Tape,Protect	1	MJN061102
316	MKC66159601	Window,Camera	1	MKC00
317	MDJ65084601	Filter	1	MDJ00
318	MJN70267701	Tape,Protect	1	MJN061106
319	MJN70113901	Tape,Camera	1	MJN00

Copyright © 2017 LG Electronics. Inc. All right reserved. Only training and service purposes

No	Part No	Description	Qty	Location No.
320	MJN70187401	Tape,Protect	1	MJN061105
321	MJN70091404	Tape,Protect	1	MJN061104
322	MEZ64319901	Label,After Service	1	MEZ000900
323	MCQ68986301	Damper,Camera	1	MCQ02
324	MFB64393601	Lens,Flash	1	MFB00
325	MJN70091403	Tape,Protect	1	MJN061103
326	ACW75437001	Decor Assembly	1	ACW00
327	MCR66687701	Decor	1	MCR000000
328	MJN70148201	Tape,Camera	1	MJN009400
329	MJN70091401	Tape,Protect	1	MJN061101
330	EAA64587601	PIFA Antenna,Multiple	1	EAA00
331	EAB64370201	Speaker,Dual Mode	1	EAB01
332	ACQ89345801	Cover Assembly,Bar	1	ACQ003400
333	ACQ89404801	Cover Assembly	1	ACQ00
334	MBL67097601	Cap	1	MBL00
335	ACK73469001	Contact Assembly	1	ACK00
336	ACW75377401	Decor Assembly	1	ACW000000
337	MCR66687801	Decor	1	MCR000000
338	MJN70110401	Tape,Decor	1	MJN020800
339	MJN70091201	Tape,Camera	1	MJN01
340	MDS65792801	Gasket	1	MDS00
341	ACQ89287201	Cover Assembly,Front	1	ACQ032700
342	ACQ89317601	Cover Assembly,Front(Sub)	1	ACQ033200
343	MCK69394001	Cover,Front	1	MCK032700
344	MDQ65056601	Frame	1	MDQ000000
345	MICE0016905	Insert,Nut	4	MET099500
346	MHK65669701	Sheet	1	MHK000000
347	MCQ68986201	Damper	1	MCQ04
348	MJN70148101	Tape	1	MJN02
349	MJN70091101	Tape	1	MJN03
350	MDS65754201	Gasket	1	MDS01
351	MDS65850401	Gasket	1	MDS02
352	MDS65850402	Gasket	1	MDS03
353	EAU63423201	Motor,DC	1	EAU00
354	EAT63355101	Module,Hybrid Touch LCD	1	EAT130000
355	EBR83532202	PCB Assembly,Flexible	1	EBR03
356	EBR83570302	PCB Assembly,Flexible,SMT	1	EBR070400
357	EBR83532302	PCB Assembly,Flexible,SMT Top	1	EBR070300
358	EAX67192802	PCB,Flexible	1	EAX010700
359	EBR83570402	PCB Assembly,Flexible,SMT Bottom	1	EBR070200
360	MBL67097602	Cap	1	MBL01
361	MBL67097603	Cap	1	MBL02

Copyright © 2017 LG Electronics. Inc. All right reserved. Only training and service purposes

No	Part No	Description	Qty	Location No.
362	MCQ68927001	Damper,Speaker	1	MCQ03
363	MJN70112001	Tape,Protect	1	MJN061100
364	EBP62982701	Camera Module	1	EBP01
365	EBR83507801	PCB Assembly,Flexible	1	EBR01
366	EBR83525701	PCB Assembly,Flexible,SMT	1	EBR070400
367	EBR83563201	PCB Assembly,Flexible,SMT Top	1	EBR070300
368	EAX67116301	PCB,Flexible	1	EAX010700
369	EAG64991101	Jack,Phone	1	EAG140301
370	EBR83541401	PCB Assembly,Flexible,SMT Bottom	1	EBR070200
371	EBR83507901	PCB Assembly,Flexible,Insert	1	EBR070100
372	MJN70227701	Tape	1	MJN000000
373	EAB64468201	Receiver	1	EAB00
374	MEV66170801	Insulator	1	MEV00
375	MLAZ0038301	Label	1	MEZ000000
376	GMEY0014301	Screw,Machine	11	FAB00
377	MEZ66680401	Label,Approval	1	MEZ002101
378	FAB32218901	Screw,Tapping	0	FAB01
379	SAD36243201	Software,Mobile	1	SAD010000
380	AAD88270701	Addition Assembly	1	AAD000000
381	ACQ89393101	Cover Assembly,Battery	1	ACQ02
382	MCK69434201	Cover,Battery	1	MCK004100
383	MHK65765401	Sheet	1	MHK000000
384	MHK65866601	Sheet	1	MHK000001
385	MHK65866611	Sheet	1	MHK000002
386	MHK65866621	Sheet	1	MHK000003
387	EAC63360001	Rechargeable Battery,Lithium Ion	1	EAC00
388	EAD62377921	Cable,Assembly	1	EAD010000
389	EAY62709914	Adapters	1	EAY060000
390	MEZ66451301	Label,Approval	1	MEZ002100
391	MJN70111901	Tape,USP Film	1	MJN107400
392	AFN77632601	Manual Assembly,Operation	1	AFN053800
393	MBM65696601	Card,Quick Reference	1	MBM062600
394	MBM64995926	Card,Warranty	1	MBM087200
395	MFL69741501	Manual,Operation	0	MFL053800
396	AGF78416403	Package Assembly	1	AGF000000
397	AGJ74578401	Pallet Assembly	1	AGJ000000
398	MAY67888902	Box,Pallet Sleeve	0	MAY115200
399	MAY67829102	Box,Carton	0	MAY010800
400	MBL67256901	Cap,Box	0	MBL007000
401	MLAJ0004402	Label,Master Box	0	MEZ047200
402	MLAZ0050901	Label	0	MEZ000000
403	MGA64059201	Pallet	0	MGA000000

Copyright © 2017 LG Electronics. Inc. All right reserved. Only training and service purposes

No	Part No	Description	Qty	Location No.
404	MAF63267402	Bag,Vinyl	1	MAF086500
405	MAY67889601	Box,Master	0	MAY084000
406	MAY67868101	Box,Unit	1	MAY047100
407	MEZ64571201	Label,Unit Box	1	MEZ084100
408	MEZ64686921	Label,Unit Box	1	MEZ084101
409	MLAC0004541	Label,Barcode	1	MEZ084102
410	MLAJ0004402	Label,Master Box	0	MEZ047200
411	MFZ65055805	Packing,Blister	1	MFZ005500

Copyright © 2017 LG Electronics. Inc. All right reserved. Only training and service purposes